GOOD PRACTICE GUIDE:

Sampling for Pharmaceutical Water, Steam, and Process Gases

This Document is licensed to

Miss Olga Chung
Taiwan,
ID number: 1002915

Downloaded on: 6/7/22 3:22 AM

For individual use only. © Copyright ISPE 2016. All rights reserved.

GOOD PRACTICE GUIDE:

Sampling for Pharmaceutical Water, Steam, and Process Gases

Disclaimer:
The ISPE Good Practice Guide on Sampling for Pharmaceutical Water, Steam, and Process Gases aims to minimize sampling errors, which could prevent out of specification results tainted by extrinsic factors such as environmental, atmospheric, and human contact. This Guide is solely created and owned by ISPE. It is not a regulation, standard or regulatory guideline document. ISPE cannot ensure and does not warrant that a system managed in accordance with this Guide will be acceptable to regulatory authorities. Further, this Guide does not replace the need for hiring professional engineers or technicians.

This Document is licensed to
Mr. Hsu Chi Chung
Taiwan,
ID number: 1002915
Downloaded on: 6/7/22 1:22 AM

Limitation of Liability
In no event shall ISPE or any of its affiliates, or the officers, directors, employees, members, or agents of each of them, or the authors, be liable for any damages of any kind, including without limitation any special, incidental, indirect, or consequential damages, whether or not advised of the possibility of such damages, and on any theory of liability whatsoever, arising out of or in connection with the use of this information.

© Copyright ISPE 2016. All rights reserved.

All rights reserved. No part of this document may be reproduced or copied in any form or by any means – graphic, electronic, or mechanical, including photocopying, taping, or information storage and retrieval systems – without written permission of ISPE.

All trademarks used are acknowledged.

ISBN 978-1-936379-89-7

For individual use only. © Copyright ISPE 2016. All rights reserved.

Preface

Product Quality is of paramount importance in all industries, but it is of particular importance in the Life Sciences industry and sampling is a critical part of this process. When any step of the sampling process isn't done properly, errors may be introduced and misrepresentative data can **cost companies thousands if not millions of dollars** by creating costly and unnecessary investigations and corrective actions.

Sampling can help us understand if a system is delivering the critical utility to use points in the facility or if the characteristics are changing between the generation and use of the utility.

Sampling is an involved and complicated process and very little regulatory guidance exists on this topic. *The ISPE Good Practice Guide: Sampling for Pharmaceutical Water, Steam, and Process Gases* provides expert guidance on all aspects of sampling from valve design, the number, location, and placement of sample valves, sampling technique, frequency, and sample storage including delivery to the testing laboratory.

This Guide is an indispensable tool to all users of water, steam, or process gases and impacts facilities, production, and quality control personnel within a facility. As such, this Guide applies to manufacturers of pharmaceuticals, medical devices, biologics, cosmetics, and related products as well as equipment manufacturers, vendors, and other industries outside of the pharmaceutical world.

This Document is licensed to

Miss Olga Chung
Taiwan,
ID number: 1002915

Downloaded on: 6/7/22 3:22 AM

For individual use only. © Copyright ISPE 2016. All rights reserved.

Acknowledgements

This Good Practice Guide was produced by a dedicated Task Team of Subject Matter Experts (SMEs) led by Brian Hagopian, CPIP (Clear Water Consulting, Inc.). The work was supported by the ISPE Critical Utilities Community of Practice (COP).

The authors and contributors to this Good Practice Guide are listed below, but the following people deserve special recognition for their extensive involvement in developing and vetting the content for this guide: Joseph Manfredi and Teri C. Soli, PhD for the Water Chapter, Brian Pochini, CPIP for the Steam Chapter, and Ruby Ochoa for the Process Gas Chapter.

Chair

Brian Hagopian, CPIP	Clear Water Consulting, Inc.	USA

Chapter 1: Introduction

Brian Hagopian, CPIP (Chapter Lead)	Clear Water Consulting, Inc.	USA

Chapter 2: Pharmaceutical Water

Michael Baumstein	Pfizer, Inc.	USA
Rod Freeman	Beckman Coulter, Inc.	USA
Brian Hagopian, CPIP	Clear Water Consulting, Inc.	USA
Jeppe Kjems	CU Engineering	Denmark
Joseph Manfredi (Chapter Lead)	GMP Systems, Inc.	USA
Aravind Palinvelu	Roche	Singapore
Teri C. Soli, PhD	Soli Pharma Solutions, Inc.	USA
Michael Tomaselli	Filters, Water, and Instrumentation, Inc.	USA

Chapter 3: Pharmaceutical Steam

Michael Baumstein	Pfizer, Inc.	USA
Andre Gill, PE	Andre Gill Engineering	USA
Brian Hagopian, CPIP	Clear Water Consulting, Inc.	USA
Joseph Manfredi	GMP Systems, Inc.	USA
Brian Pochini, CPIP (Chapter Lead)	Sanofi	USA
Teri C. Soli, PhD	Soli Pharma Solutions, Inc.	USA
Philip Sumner, PE	Pfizer, Inc.	USA
Nancy Tomoney	West-Ward Pharmaceuticals	USA
Anders Widov	Wiphe AB	Sweden

Chapter 4: Process Gases

Michael Baumstein	Pfizer, Inc.	USA
Brian Hagopian, CPIP	Clear Water Consulting, Inc.	USA
Ruby Ochoa	Trace Analytics, LLC	USA
Aravind Palinvelu	Roche	Singapore
Michael Vestermark	Novo Nordisk Biopharm	Denmark
Peter Vishton (Chapter Lead)	Independent Consultant	USA

Glossary

Michelle Gonzalez, PE	Amgen, Inc. (retired)	USA

This Document is licensed to
Mr. Wei-Ming Tsai
Taiwan,
ID number: 1002915
Downloaded on: 6/7/22 3:22 AM

For individual use only. © Copyright ISPE 2016. All rights reserved.

Special Thanks

The Sampling Guide Task Team would like to express thanks to ISPE for technical writing and editing support from Gail Evans (ISPE Guidance Documents Technical Writer and Editor) for her thorough review and countless hours of editing assistance in the final preparation of this Guide.

The Task Team would also like to thank the dozens of technical reviewers who commented on the initial draft of this Guide and provided the valuable feedback necessary to ensure that this Guide became a clear and concise reference document.

Company affiliations are as of the final draft of the Guide.

Cover photo: Shutterstock.

This Document is licensed to

Miss Olga Chung
[illegible]
[illegible]

Downloaded on: 6/7/22 3:22 AM

600 N. Westshore Blvd., Suite 900, Tampa, Florida 33609 USA
Tel: +1-813-960-2105, Fax: +1-813-264-2816

www.ISPE.org

For individual use only. © Copyright ISPE 2016. All rights reserved.

Table of Contents

1 Introduction 7
1.1 Background 7
1.2 Overview 10
1.3 Scope and Purpose 10
1.4 Benefits 11
1.5 Objectives 11
1.6 Key Concepts/Terms 11

2 Pharmaceutical Water 13
2.1 Introduction 13
2.2 Determining Sampling Locations 19
2.3 Developing Sampling Plans 24
2.4 Sample Valve Design 38
2.5 Sampling Techniques 40
2.6 Handling of Samples 44
2.7 Parametric (Real Time) Release 48

3 Pharmaceutical Steam 51
3.1 Introduction to Pharmaceutical Steam 51
3.2 Generation and Distribution of Pharmaceutical Steam 51
3.3 Sampling Locations 56
3.4 Sampling Plans (Frequency and Duration) 63
3.5 Sample Valve Design 68
3.6 Pure Steam Sampling Techniques 68
3.7 Sample Handling 76
3.8 Other Factors Influencing Sampling Strategies 76

4 Process Gases 81
4.1 Introduction 81
4.2 Sampling Locations 83
4.3 Sampling Plan (Tests Performed, Frequency and Duration) 88
4.4 Sample Valve Design 91
4.5 Gases Sampling Techniques for Compressed Air and Process 91
4.6 Sample Handling 94
4.7 System Monitoring 94

5 Appendix 1 – Specification Summary for Various Non-Pharmacopeial Water Grades 95

6 Appendix 2 – Examples of Water System Sampling Point Locations 97

7 Appendix 3 – Factors Influencing Pure Steam Generator Performance 101
7.1 Source Water 101
7.2 Steam Generator Mist Elimination Capability 102
7.3 Non-condensable Gas Removal Capability 103
7.4 Blow Down Adjustment 103
7.5 Potable Water Chloramine Use 103
7.6 Anti-scaling Steam Additives 103
7.7 Monitoring Locations and Frequency 104

This Document is licensed to
Miss Olga Chung
Taiwan,
ID number: 1002915
Downloaded on: 6/7/22 3:22 AM

For individual use only. © Copyright ISPE 2016. All rights reserved.

8 Appendix 4 – References 105

9 Appendix 5 – Glossary 107

9.1 Acronyms and Abbreviations 107

9.2 Definitions 109

This Document is licensed to

Miss Olga Chung
Taiwan,
ID number: 1002915

Downloaded on: 6/7/22 3:22 AM

For individual use only. © Copyright ISPE 2016. All rights reserved.

1 Introduction

1.1 Background

Effective sampling is of paramount importance to the success of any pharmaceutical critical utility system. Unfortunately, there is very little regulatory guidance with regards to sampling. Extracting a representative sample from a utility system is an involved and complicated process and error may be introduced due to:

- Environmental conditions
- Sample valve design
- Sample point location
- Technique
- Container type
- Sample handling
- Sample storage and transport
- Other factors

The impact of these factors is widespread and occurs throughout industry. Errors due to sampling are so common that the 1993 US FDA "Guide to the Inspection of High Purity Water Systems" [1] specifically addresses sampling errors in recommendations to their field inspectors by stating that, *"it is expected that [Water For Injection systems] be essentially sterile. Since sampling frequently is performed in non-sterile areas and is not truly aseptic, occasional low level [bacteria] counts* ***due to sampling errors*** *may occur."*

Improper sampling may be responsible for generating Out Of Specification (OOS) data and prompting investigations when a system is actually producing and delivering acceptable quality. Conversely, improper sampling may also create a more dangerous scenario where the quality is actually OOS but the data incorrectly indicates that the quality is acceptable. In either case, there could be negative impact on company image, cost, productivity, ethics, and regulatory liability, resulting from improper sampling. Identifying the elements of proper sampling and eliminating the underlying reasons for these negative consequences formed the primary driving force behind this ISPE Good Practice Guide.

This Document is licensed to
Mr Olex Shuns
Tsotsi,
ID number: 1002915
Downloaded on: 6/7/22 3:22 AM

1.1.1 What is a sample?

Simply stated, the intent of sampling is to take a small but representative portion of a much larger stream, where the sample collected accurately represents the content of the larger stream. The sample collected should not be altered or changed in any way because the sampling process, but this is an almost impossibly difficult proposition as all sampled utilities come into contact with air, containers, etc. during the sampling process.

1.1.2 Why do we sample?

It is most desirable to monitor quality parameters using in-line, on-line, or at-line monitors, which minimize and, in some cases, eliminate, sample handling issues completely. However, when the quality attribute of concern cannot be analyzed with an instrument or where an instrument is not present, a sample has to be removed from a stream and evaluated off-line. In most cases, these attributes are microbiological or endotoxin in nature, but sampling for Total Organic Carbon (TOC) and conductivity are commonly done as well.

For individual use only. © Copyright ISPE 2016. All rights reserved.

The goal of sampling really depends on why the sample is being collected. Sampling generally occurs for one or more of the following reasons:

- Regulatory requirements
- Quality control purposes
- Process control purposes
- Technical, investigational or diagnostic purposes
- Test method validation purposes

Each of these purposes is described below.

Regulatory monographs establish compendial requirements for Critical Quality Attributes (CQAs) in a critical utility system. Industry must demonstrate that the utility's CQAs are being met through instrumentation or sampling. There are usually established sampling frequencies, and some of these frequencies may be established by authorities and regulating agencies. In this sampling guide, we will refer to sampling for these purposes as **sampling to meet regulatory requirements.**

In some cases, the utility being sampled is an ingredient or comes into direct contact with a pharmaceutical product. In this case, sampling is done to ensure that the quality of the utility meets established quality parameters. In these instances, samples must be taken in the exact way that the utility is removed from the delivery system during manufacturing. Stated a bit differently in the case of taking a water sample, samples shall be collected from the end of a hose or pipe in a manner that replicates exactly how the utility is used during manufacturing. Samples need to be tested for all quality attributes that are specified for the grade of the utility. There are usually established frequencies for sampling, and frequencies may be established by regulatory authorities as well as by internal Standard Operating Procedures (SOPs). In this Good Practice Guide, we will refer to sampling for these purposes as **sampling for quality control purposes.**

In other cases, sampling may be done regularly, but at a different frequency than samples taken for quality control purposes. Samples of this type would be taken to confirm that a particular process is operating under a state of control. Here, the goal of sampling is completely different in that the purpose is to determine if a specific contaminant is being reduced to the levels established for that particular treatment process. The acceptance level for the contaminant being removed may be different from the final product quality attribute level because the attribute is being tested midway through a multi-step purification process. In this case, it would be a waste of resources to test the sample for anything other than the contaminant that the process has been designed to remove. There is no requirement to test for anything other than the established quality attributes for the treatment step. Sampling for all quality attributes of the finished material and this location would provide data with little meaning. When sampling for these purposes, it is critically important that the sample removed from a system be as representative as possible of the material flowing through the system. Great care should be taken to ensure that samples are not contaminated. Careful consideration should be taken in flushing or preparing these lines, for example by spraying with alcohol prior to or immediately following sample collection. In this guide, we will refer to sampling for these purposes as **sampling for process control purposes.**

The Pharmaceutical Microbiology
Institute Taiwan,
ID number: 1002915
Downloaded on: 6/7/2023 2:22 AM

If other instances, sampling may be done only as needed, e.g., if an Alert Level is reached for a critical quality attribute, investigation into the root cause of the excursion would suggest sampling from locations that are not part of the regular testing program. The frequency of sampling for these purposes will vary from the frequency of sampling for all other purposes and would typically occur on an as needed basis as established in SOPs. In this sampling guide, we will refer to sampling for these purposes as **sampling for technical, investigational, or diagnostic purposes.**

For individual use only. © Copyright ISPE 2016. All rights reserved.

While there is no established regulatory requirement, a robust sampling program should periodically go through a method validation process where duplicate samples are taken from a small number of sample points to document the consistency of the data and therefore the accuracy of the method. Sampling for these reasons represents **sampling for method validation purposes.**

Note: there is no purpose classified as **sampling for informational purposes only.** While industry has used this description in the past, and many in industry continue to use this designation, every sample point should have a specific purpose and the authors of this guide are recommending abandoning the "for informational purposes only" designation as being too vague and non-specific.

When developing a sampling program and considering sampling at a particular location, the purpose the sample point will serve should be considered. Sample valves should always be installed for a specific purpose and this purpose should be documented. The purpose of a particular sampling point is used to establish the frequency as well as the attributes monitored. For each sampling point, a risk-based approach should be utilized to establish or adjust sampling frequencies based on data collected over time. As an example, an effective sampling program might sample for bacteria and endotoxin after a carbon filter both before and immediately following a sanitization.

The results derived from an effective sampling program provide us with greater knowledge and understanding of these critical utilities. Sampling brings a greater understanding of when a piece of equipment is operating properly and when it may require adjustment or routine service in order to keep a system operating under a state of control. Results of an effective sampling program can be used to establish normal operating levels for a purification process or distribution system, or for the end product quality. In most cases, data collection and review allows for the establishment and future adjustment of Alert (2σ) and Action (3σ) Levels based on actual operating conditions.

Sampling can help us understand if a system is delivering the critical utility to use points in the facility or if the characteristics are changing between the generation and use of the utility.

1.1.3 Who is responsible for sampling?

Ultimately, the quality control function is responsible for sampling, but other stakeholders may become involved with sampling including quality assurance, utilities, facilities, manufacturing, production, or regulatory.

1.1.4 How often do we need to sample?

Sampling frequency depends on the system and the grade of the critical utility. In the case of Water For Injection (WFI) grade water, it is an expectation that water samples will be taken from each Point Of Use (POU) and sample location in the distribution system at least once per week during validation. Industry has continued to utilize this same sampling frequency beyond the completion of the Performance Qualification, although it is not mandated. By contrast, purified water has no such preconceived sampling requirements, so the end user is not mandated to follow any specific schedule during or following validation, although many companies also having WFI systems default to the same frequency used on WFI systems. Pharmaceutical steam, compressed air, and process gases have different frequencies during validation and ongoing operation. When no sampling frequency is specified, a risk-based approach may be utilized in conjunction with the purpose of sampling to establish initial sampling frequencies. As data is generated and an operating baseline is established, the collected data should be reviewed to determine if the operating limits, Alert and Action Levels, and/or the sampling frequency may be adjusted (increased or decreased) based on data generated on system operation and as established within operational SOPs.

For Commercial Use Only
Taiwan
Downloaded on: 6/7/22 3:22 AM

1.1.5 Where do we need to sample?

Sampling locations are determined by the purpose of sampling and the information expected from the sampling location. Careful consideration and sound engineering judgment should be utilized to distinguish between sampling locations for Regulatory Compliance, Quality Control, Process Control, or Investigational and Diagnostic purposes.

For individual use only. © Copyright ISPE 2016. All rights reserved.

1.1.6 Are all quality attributes uniformly distributed in a system?

The answer is a resounding no, and this is one of the most important paradigm shifts that the reader should understand when defining and evaluating a sampling program. In pharmaceutical water systems, if a quality attribute is a chemical constituent (e.g., nitrates, conductivity, dissolved metals, TOC) then the constituent is considered uniformly or homogeneously distributed (Second Law of Thermodynamics). However, if the quality attribute is biological in nature (e.g., bacteria, endotoxin), then the quality attribute will not be uniformly distributed. Non-uniform or heterogeneously distributed attributes are much more challenging to sample accurately as these attributes may vary from point to point in a system. A significant portion of this Guide is devoted to providing guidance on the most effective methods for accurate sample collection involving these heterogeneously distributed quality attributes.

In pharmaceutical steam systems, compressed air, and process gas systems, attributes may or may not be uniformly distributed and sampling programs must take this into account.

1.2 Overview

This Guide affects users of water, steam, compressed air, or process gases and impacts facilities, production, and quality control personnel within a facility. This Guide applies to manufacturers of pharmaceuticals, medical devices, biologics, cosmetics and related products, as well as equipment manufacturers, vendors, and other industries outside of the pharmaceutical arena.

1.3 Scope and Purpose

This Guide has been assembled to provide assistance to designer engineers, process engineers, facilities engineers, quality assurance staff, quality control staff, production staff, and any other group, team, or individual that may be impacted by the results of a sampling program.

This Guide covers the critical utilities of pharmaceutical water, pharmaceutical steam, and pharmaceutical process gases in the chapters that follow.

While the focus of this Guide is geared to the pharmaceutical, biotechnology, and other life science industries, the ideas, concepts, and methods detailed in this Guide may prove valuable and applicable to other industries incorporating the utilities covered in this Guide. In the life science industries, it is important to remember that the product manufacturer is ultimately responsible for all quality attributes that impact raw material and finished product quality.

This Guide covers all aspects of sampling from valve design, the number, location, and placement of sample valves, sampling technique, frequency, and sample storage including delivery to the testing laboratory.

The scope of this Guide stops when the sample is delivered to the laboratory for analysis. This Guide does not include the actual testing performed after the sample is turned over to the laboratory. Further, this Guide does not cover the interpretation or analysis of data generated by the sampling programs referenced in this Guide. While this data is usually collected and compiled to establish alert (e.g., standard deviations (2σ) from the mean) and action (e.g., three standard deviations (3σ) from the mean) levels for the parameter being measured, a thorough discussion of data interpretation is outside the scope of this Guide.

This Guide does not cover Heating, Ventilation, and Air Conditioning (HVAC) systems for cleanrooms, environmental monitoring, Active Pharmaceutical Ingredients (APIs), or finished products.

This Document is licensed to
[illegible] Taiwan
Downloaded on: 6/7/22 3:22 AM

For individual use only. © Copyright ISPE 2016. All rights reserved.

1.4 Benefits

This Guide aims to:

- Provide industry with standards and best practices for sampling in a comprehensive single reference.
- Help to minimize sampling errors and their contribution to Out of Specification (OOS) results, which can cause costly work and production stoppages, investigations, and disruptions in manufacturing, Quality Control (QC)/ Quality Assurance (QA), and engineering organizations.

This Guide is expected to be of benefit to laboratory, QC/QA, engineering, facilities, and operations personnel.

1.5 Objectives

This Guide aims to establish good practices for sampling to minimize sample contamination from human contact, error, atmospheric, or environmental conditions which could alter laboratory results and provide inaccurate data.

1.6 Key Concepts/Terms

Alert Level

A level or range that, when exceeded, indicates that a process may have drifted from its normal operating range. May be established at two standard deviations (2σ) from the mean. Constitutes a warning and does not necessarily require a corrective action.

Action Level

A level established that, when exceeded, indicates that a process from its normal operating range. Typically established at three standard deviations (3σ) from the mean. Corrective actions should be taken to bring the process back into its normal operating range.

Contaminant

Any foreign component present in another substance; used synonymously with impurity in this Guide.

Impurity

This Document is licensed to

A foreign agent that is introduced as part of a process; used synonymously with contaminant in this Guide.

Miss Olga Chung
Taiwan,
ID number: 1002915

Downloaded on: 6/7/22 3:22 AM

For individual use only. © Copyright ISPE 2016. All rights reserved.

This Document is licensed to

Miss Olga Chung
Taiwan,
ID number: 1002915

Downloaded on: 6/7/22 3:22 AM

For individual use only. © Copyright ISPE 2016. All rights reserved.

2 Pharmaceutical Water

2.1 Introduction

Water is one of the most widely used materials in the pharmaceutical industry and is commonly used as a:

- Product or Ingredient
- Cleaning agent
- Sterilizing media
- Analytical agent
- Formulation aid

When water is used for pharmaceutical purposes it needs to be tested to ensure that it meets monograph requirements or other specifications for applicable CQAs. When water is extracted for sampling purposes at any point in a system for any reason, proper sampling is the key to ensuring that the collected sample accurately represents the quality of the water at that particular point in the system. When water is sampled in the same way as it is used during manufacturing, sampling is considered the best indicator available of the quality of water going into a product.

2.2.1 Background

Extracting water from a system into a container for subsequent laboratory analysis is the most common sampling utilized by pharmaceutical companies to determine the levels of CQAs. This testing methodology is also the most frequently used method for determining the microbiological and endotoxin content of water. As the accuracy and reliability of instrumentation has increased, establishing the equivalency between the conventional “sample and laboratory test” method and the “continuous monitoring with an instrument” method may allow an increasing number of CQAs to be verified continuously. This can substantially reduce the frequency of water sampling from a system. In order to determine if an attribute is a candidate for monitoring with process instrumentation, the uniformity of distribution of the attribute within a water system needs to be understood.

In pharmaceutical water systems, CQAs or other impurities may or may not be uniformly distributed in a distribution system. The homogeneous or heterogeneous nature of distribution of CQAs in a system should be understood prior to formulating a sampling plan.

2.1.1.1 Homogeneously Distributed Impurities

This Document is licensed to
Mr. Piet Van
Downloaded on: 6/22/2022 4:00
PM
Licence: 100205

Chemical impurities, small particulates, and other soluble impurities are typically expected to be homogeneously distributed throughout a distribution system because of the solubility and nature of these impurities, and because of chemical equilibrium processes. Since the impurity levels at any one location in a distribution system should be identical to the impurity levels at every other location within the distribution system, sampling for homogeneously distributed impurities may not be required at every POU and may be performed at a limited number of locations, provided that there is no likelihood of downstream sources of contamination.

Homogeneously distributed impurities are candidates for continuous monitoring using on-line, in-line, or at-line instruments if the impurity levels at the instrumentation locations have been validated through sampling and laboratory analysis to be predictive of the levels at all POUs. When validated in this manner, the resulting data may be used for quality control or water release purposes. Sampling and testing of these impurities is typically done at the return of a distribution loop, but may be done in other locations. Impurities falling into the homogeneously distributed impurity category include:

For individual use only. © Copyright ISPE 2016. All rights reserved.

- Ionic impurities (detected non-specifically as electrical conductivity or resistivity)
- Organic impurities (detected non-specifically as TOC)
- Nitrates (EP [2] requirement for Purified Water (PW) and Water For Injection (WFI))
- Heavy metals (EP [2] requirement for PW[1])

Localized sources of chemical impurities may be introduced to a system downstream of a particular point within a distribution system. For example, chemical contamination sources after a POU valve, such as from hoses, gaskets, or a POU heat exchanger may contaminate the water as it exits the system at one particular location. Chemical contamination sources within a sub loop, parallel loop, or other isolated portion of the system could contaminate the water in only that portion of the system. The purity of the water in these sub loops and POU locations may not, therefore, be accurately represented by on-line, in-line, or at-line instrumentation installed in the main distribution system. In system sub loops, additional on-line, in-line, or at-line instrumentation may be required in order to accurately measure these impurities, or manual testing by sampling may be utilized at POUs within these sub loops.

2.1.1.2 Heterogeneously Distributed Impurities

Bacteria and endotoxin are attributes that are not uniformly distributed throughout a water system. The reason is that most bacteria present in the system are not free floating, but are part of a biofilm that is attached to system surfaces within a water system. It is generally understood that the majority of bacteria present in a system (99.9 to 99.99%) reside in biofilm. It is the small fraction (0.01 to 0.1%) of free floating or planktonic bacteria that contribute to the bacteria and endotoxin levels detected by sampling.

Biofilm development occurs more rapidly in areas of low or no flow where bacteria are able to attach to surfaces more easily. Bacteria and endotoxin populations may, therefore, vary widely because of variable local flow conditions. Examples of low flow areas that allow bacteria to attach to a distribution piping system include:

- Within any non-flowing side connections of any length, including dead legs
- On the upstream or wet side of valve sealing surfaces
- On the water stopping sealing surfaces within the valve
- On the downstream side of the valve surfaces (which may remain wet or moist)
- On the fitting and gasket used to connect a hose or other connector
- Within the hose or connector to the actual location of water use
- Within any additional external device connected to the system through which the water flows, such as:
  - Flow meters
  - Pressure regulators
  - Heat exchangers
  - Check valves
  - Hoses, fittings, adapters, etc.

This Document is licensed to
Miss Olga Chung
Taiwan,
ID number: 1002915
Downloaded on: 6/7/22 3:22 AM

[1] According to the EP [2] if Purified Water meets the conductivity limits for WFI, then heavy metals testing is not required.

For individual use only. © Copyright ISPE 2016. All rights reserved.

Localized low flow conditions throughout a system and at POUs creates differing conditions and variable bacteria and endotoxin populations at these locations. For this reason, sampling is required of each POU location to confirm the presence or absence of bacteria. Sampling the supply and return may indicate the general condition of the distribution system, but is simply not sufficient to establish the bacterial characteristics and population of the entire distribution system.

2.1.2 Purpose of Sampling

The purpose of sampling should be identified and documented for each potential sample location within a system as early as possible during the design process. This process should justify and document the requirement for sampling and identify the reason for sampling at a particular location.

The purpose of any potential sampling location should fall into one or more of the following categories:

1. Regulatory requirements
2. Consensus standards
3. Process control purposes
4. Quality control purposes
5. Technical, investigational, or diagnostic purposes

The justification for a potential sampling location should also consider:

- The impurities of interest at the potential location
- The type of valve and other accessories that are best suited for or are contra-indicated for the potential location
- Should sampling should be performed at this location at an established frequency
- Should sampling be performed on an event based frequency (i.e., reaching an alert or action level)
- Is the potential location readily accessible to staff
- Can the sample be taken safely by staff at the potential location
- Any special considerations for sample handling after a sample is taken

This Document is licensed to

The purpose of a sampling location may impact the impurities of concern as well as the sampling frequency.

Miss Olga Chung
Taiwan,
ID number: 1002915

2.1.2.1 Regulatory Requirements

All pharmacopoeias define two bulk grades of water for pharmaceutical purposes:[2]

1. Purified Water (PW)
2. Water For Injection (WFI)

Downloaded on: 6/7/22 3:22 AM

[2] Highly Purified Water (HPW) is an additional pharmaceutical grade of water as defined by the European Pharmacopoeia.

For individual use only. © Copyright ISPE 2016. All rights reserved.

While there are some differences between the various pharmacopoeias on the exact specification for some impurities, the general consensus is that the following impurities should monitored:

- Conductivity
- TOC
- Endotoxin (for WFI only)

Some pharmacopoeias also require testing for heavy metals and nitrates. Consult applicable monographs for exact specification.

While bacteria testing is not a monograph requirement, all pharmaceutical companies sample and test for bacteria. The pharmaceutical industry references the 1993 US FDA "Guide to the Inspection of High Purity Water Systems" [1] which stipulates the following maximum bacteria action limits for pharmaceutical water systems:

- Bacteria action limits at or below 100 cfu per ml for PW
- Bacteria action limits at or below 10 cfu per 100 ml for WFI

The pharmaceutical industry has universally adopted these action limits as specifications for PW and WFI and pharmaceutical water systems are sampled and tested for:

- Conductivity
- TOC
- Endotoxin (WFI only)
- Bacteria

2.1.2.2 Consensus Standards

Consensus standards may be utilized as a source for water quality specifications if the use of water within the facility or a portion of a facility is consistent with those standards. Consensus standards such as the International Organization for Standardization (ISO) [3], the American Society for Testing and Materials (ASTM) [4], the Association for the Advancement of Medical Instrumentation (AAMI) [5], or the Clinical and Laboratory Standards Institute (CLSI) [6], have application specific standards for water purity. These water quality specifications may be found in Appendix 1.

This Document is licensed to

2.1.2.3 Process Control Purposes

Monitoring a water purification system for process control purposes involves monitoring the performance and success of the various treatment processes for specific attributes of concern and includes following the quantitative trends of those or related attributes of interest. When data trends from this monitoring indicate that some aspects of the water purification system or other physical or procedural process controls are not performing as intended, then investigations and targeted remedial interventions can be instituted to bring the process back into normal operational control before the finished quality of the water is sufficiently affected to adversely impact its quality specifications.

Downloaded on 6/7/22 3:22 AM

It is considered appropriate to monitor only those attributes related to the monitoring or control of a given function in the purification process. For example, it may be appropriate to monitor a carbon bed for the reduction of chlorine, the reduction of TOC, and the effluent (outflow) microbial level since carbon beds are installed to impact these attributes (microbial levels being an adverse effect of installing a carbon bed) and high levels of these contaminants could negatively impact the operation and maintenance of downstream unit operations. However, it would not be appropriate to monitor hardness or conductivity at this location, as the carbon bed is not impacted by, nor is

For individual use only. © Copyright ISPE 2016. All rights reserved.

it intended to impact, these attributes. The selection of the appropriate attributes to monitor should be tailored to the unit operation's function as well as potential downstream impact. The attributes selected for process control monitoring may be different than attributes selected to meet compendial requirements.

Process control sampling points may be strategically located throughout the water purification system. They may be located at the beginning and end of distribution loops or near critical POUs which are typically not used by manufacturing. They may also be located at POU valves in the distribution system that is used by manufacturing. In these cases, sampling may be limited only to final product CQAs such as conductivity, TOC, bacteria, and endotoxin (WFI only). POU valves with built in upstream sampling ports may be utilized for process control monitoring.

Biological attributes such as bacteria and endotoxin that are not homogeneously distributed throughout a water system have the potential to contaminate the attribute being monitored at a process control sampling location as water is sampled. In these cases, efforts should be made to prevent or minimize sample contamination from these attributes.

Process control indicating trigger values, such as Alert and Action Levels, are typically used to assist in identifying when the process is deviating from its normal operating capabilities.

Alert Levels

Alert Levels should be set at levels that are near the top edge of normal data trends. Alert levels may be based on analysis and trending of historic performance data and are usually set at two standard deviations (2σ) from normal operating levels.

An occasional Alert Level excursion that is barely above the Alert Level could be considered a normal expectation, as it is within the upper reaches of the normal operating trends for the system. Though such a level could be an early indication of a growing control problem, it could also be simply the variability of normal operating data. Responses to Alert Level excursions should include notification of appropriate quality, manufacturing, and maintenance personnel, along with closer attention being paid to the routine data. Frequent excursions beyond the Alert Level should not be expected and might also be considered out of trend.

When data begins to drift outside of the normal trends and expected performance, notification of those who may potentially be affected, as well as resampling, may be appropriate to verify if the data trends are consistently higher (a possible developing control problem) or not (a possible sampling inconsistency or normal data variability).

Where Alert Level excursions occur concurrently at multiple locations or sequentially at the same location, this may be an indication of a need for investigation and remediation and may be escalated to an Action Level excursion.

Action Levels

This Document is licensed to
Miss Olga Chung
Taiwan,
ID Number: 1092915
Downloaded on: 6/7/22 2:22 AM

Historic data trending should be used to establish Action Levels, which are typically set at three standard deviations (3σ) from normal operating levels. Action Levels should be established at values that are:

- Above the normal data trends and indicative of routine process controls beginning to fail
- Far enough from the specification so that remedial action(s) can bring the process back under control before a specification excursion occurs

Resampling and retesting should be one of the first corrective actions (along with the usual notification of appropriate parties such as for Alert Level excursions) to see if the excursion conditions are an indication of a true process control problem or the result of a sampling problem.

Where high values are confirmed by retesting, or if the original value is following Alert Level excursions, appropriate remediation activities should be instituted to restore control and determine the cause(s) of the excursions, so that corrective measures can preclude recurrence and remediate any potential impact to quality specifications.

For individual use only. © Copyright ISPE 2016. All rights reserved.

2.1.2.4 Quality Control Purposes

When monitoring for quality control of the water, the intent is to:

1. Exactly duplicate the quality of water that is being used for manufacturing by collecting samples at routine intervals

2. Collect water samples at the beginning of a period when the water is being drawn from the system for manufacturing use

Exact duplication of the preparatory procedures utilized by manufacturing should be used during sampling, and should include the use of the same:

- Outlet sanitization practice, if applicable

- Hose and gasket

- Outlet flush procedure (if any)

- Attached devices such as heat exchangers, reducers, adapters, check valves, and flow meters

The purpose of including all of the potential sources of contamination in the flow path for sampling is to attempt to duplicate the water quality delivered to the manufacturing process, including any heterogeneously distributed contaminants coming from the associated biofilms on or within these components.

Hard piped or otherwise permanent connections between the water system and manufacturing equipment, as well as automatic valves, create challenges for obtaining samples that duplicate the way that water is used by manufacturing. One engineering solution may be to utilize a three way divert valve that may be installed on the manufacturing equipment. This could facilitate sampling by diverting water to obtain a sample. Alternatively, there could be a sample port on, or near, the equipment isolation valve that could allow a sample to be collected when the water is first being discharged into the processing tank or other POU. Another approach (if feasible) may be to simply disconnect the interconnecting piping and direct the water flow toward a sample container, instead of allowing it to flow into the manufacturing equipment.

While POU valves with a built in upstream sample port may be used when sampling for process control purposes, they are typically not used when sampling for quality control purposes. The only exceptions that may allow use of a built-in sampling port on the POU valve would be:

- The conduit is routinely sanitized with a validated procedure prior to water use for manufacturing with sanitization occurring by hot water, steam, or chemicals so that the conduit provides no added contamination to the loop water

- There is no feasible engineering solution that allows sampling exactly as used during manufacturing

- The relevant attributes at that particular POU were not microbial, i.e., only the homogeneously distributed chemical impurities, e.g., for a washer whose cycle ends with a hot (> 60°C air) drying step that would kill any microbial contaminants in the transferred water

The test data from quality control sampling should be used for comparison with the quality control requirements or specifications for the water.

This Document is Licensed to
Miss Olga Chung
Taiwan,
Downloaded on: 6/7/22 3:22 AM

For individual use only. © Copyright ISPE 2016. All rights reserved.

Alert, Action, and Out Of Specification (OOS) Levels

Sampling could be performed from the same sample location for process control and quality control purposes. Different Alert and Action Levels could be established; however, process control levels may typically be established at tighter values than those for quality control.

For an excursion above a specification limit, an investigation should be performed to determine, correct, and prevent the cause of the excursion from occurring in the future. In this case, the particular investigation would be an OOS investigation and the impact of this water on the product should be assessed.

2.1.2.5 Sampling for Technical, Investigative, or Diagnostic Reasons

Sampling performed for technical, investigative, or diagnostic reasons may include:

- Gathering data to better understand (or pinpoint) the root cause of a process deviation or specification excursion
- To determine the extent of contamination within a system
- To spot check the long-term efficacy of a particular remedial action (e.g., from a CAPA response) by checking specific attribute levels at a specified location

Additional sampling points, installed for technical, investigative, or troubleshooting purposes may not be routinely sampled. For instance, if a Reverse Osmosis (RO) membrane was prematurely scaling with hardness, it would be appropriate to sample upstream and downstream of a water softener to determine if hardness reduction levels were being achieved throughout the softener use cycle or if the water hardness increased since the equipment was originally set up.

Data from technical, investigative, or diagnostic sampling can also be used to establish a baseline for non-routinely measured water attributes (such as the chemical attributes of the potable feed water during initial commissioning or validation) which may be valuable in future investigations. Samplings of this nature are typically done only occasionally and only when needed for long term profiling, or as part of an investigation.

2.2 Determining Sampling Locations

Locating sample points to ensure samples are taken from suitable process locations before and after unit operations, at points of use and elsewhere, should assure a successful water system monitoring program. Since many technologies and unit operations may be employed to produce pharmaceutical grades of water, sampling locations are best identified during the conceptual and detailed design phases. A Risk Analysis (RA) may be performed to help determine sample locations. The RA can provide a rationale for the sampling points in a water system and can help to define the intended purpose of each sampling location, based on established CQAs and Critical Process Parameters (CPPs).

These sample locations should provide samples that are representative of water quality at the sample location. This cannot be accomplished without serious consideration to the physical location of these valves and the methods that should be utilized to obtain the sample. Sample valve locations should be addressed not only on a P&ID but should also be addressed during the equipment and piping installation. Components, hardware, or other items that interfere with correct sampling techniques should be avoided through careful planning and appropriate field execution. Considerations should include the disposition of waste from flushing, location of sample ports relative to other equipment, local environmental issues, and any other appropriate concerns. Design in consultation with QA, QC, and Microbiology Subject Matter Experts (SMEs) is desirable.

For individual use only. © Copyright ISPE 2016. All rights reserved.

For example, sample valves located in return loop piping that are inaccessible to samplers, sample valves blocked by other equipment or with otherwise limited access, and/or sample valves that cannot be utilized in a reasonable fashion, do not accomplish the goal of ensuring that the samples are representative. Improper location may put a sampler's safety at risk or may yield data with a high degree of variability, and may result in an increase in alert limit, action limit, and OOS findings.

Sampling locations should include all appropriate sections of the system including:

- Source water
- Pretreatment unit operations
- Primary and final treatment
- Storage
- Distribution systems (main loops and sub loops)
- POU and any special POU treatments

Sampling locations should be tabulated. Table 2.1 provides an example of such a table.

Table 2.1: Examples of some Sample Points in a Purified Water System

Drawing No.	Tag	Function/ Classification	Location (Room)	Frequency	Remarks
PW-1	PW-01	Carbon Bed Inlet	Mechanical	Monthly	Chlorine, TOC, bacteria for process control
PW-1	PW-02	Carbon Bed Outlet	Mechanical	Monthly	Chlorine, TOC, bacteria for process control
PW-2	PW-03	Deionizer Outlet	Mechanical	Quarterly	Sodium, silica for diagnostic purposes
PW-2	PW-04	Distribution Loop Supply	Mechanical	Daily/Weekly	TOC, conductivity, bacteria, for quality control purposes
PW-3	PW-05	POU Valve #1	Production Room #1	Weekly	TOC, conductivity, bacteria, for regulatory requirements and quality control

This Document is licensed to
Miss Olga Chung
Taiwan
ID number: 1000915
Downloaded on: 6/7/22 3:22 AM

2.2.1 Source Water

Source water feeding any compendial pharmaceutical water system should meet local drinking water standards such as those specified by the WHO, the US Environmental Protection Agency (EPA), drinking water regulations of the EU or Japan, or the drinking water regulations from other competent authorities. Source water that does not meet potable or drinking water standards should be brought into compliance with recognized drinking water regulations prior to being used to feed a pharmaceutical water system.

Chlorination (or chloramination) of municipal water has become common in many areas of the world, for microbiological control. If residual chlorine levels are inadequate for microbial control, rechlorination may be required and should be defined in a SOP and should be monitored on a regular basis through an appropriately located sample port. If rechlorination is required, sampling immediately afterward is also indicated.

For individual use only. © Copyright ISPE 2016. All rights reserved.

Complete chemical analysis of source water that confirms it meets the appropriate potable or drinking water requirements may be performed on a periodic basis to trend incoming contaminant levels and to make system adjustments if required. If a source water storage tank is employed, additional testing, after storage, is advisable before water enters the water purification system.

2.2.2 Pretreatment Unit Operations

Sampling locations should be included before and after each unit operation for diagnostic purposes so that monitoring can be performed as required. Sampling before and after individual unit operations helps in establishing a unit operation's performance.

The following unit operations are examples of monitoring locations that may be considered in a purification system for assessing the performance of the purification step:

- Before and after media filtration (e.g.: multi-media, cartridge, etc.)
- Before and after softeners
- Before and after Activated Carbon Filters[3]
- Before and after Ultraviolet units
- Before and after chlorination or dechlorination units
- Before and after Reverse Osmosis (RO), Continuous Electro Deionization (CEDI), or ion exchange units
- Before and after any other unit operations within the pretreatment system boundary

2.2.3 Primary and Final Treatment

Primary and final treatment for compendial or non-compendial water may include several different treatment technologies. See the *ISPE Baseline® Guide: Water and Steam Systems (Second Edition)* [7].

Examples of primary and final treatment unit operations equipment include:

- Reverse osmosis
- Continuous electro deionization
- Ion exchange deionization
- Microfiltration
- Ultrafiltration
- Nanofiltration
- Distillation
- Ultraviolet treatment
- Heat exchangers

This Document is licensed to
Miss Olga Chung
Taiwan,
ID number: 1002915
Downloaded on: 6/7/22 3:22 AM

[3] Microbial monitoring may additionally be critical in this location because activated carbon beds tend to promote microbial growth.

For individual use only. © Copyright ISPE 2016. All rights reserved.

Sampling locations should be provided before and after each treatment unit operation as appropriate. Attributes to be evaluated are based on equipment performance expectations and may include:

- Conductivity
- TOC
- Chlorine
- Ammonia
- Hardness
- Silica
- Silt Density Index (SDI)
- Microbial
- Endotoxin

Attributes may be selected for determining the performance of a unit operation and should have Alert and Action Levels that mirror the performance expectations of the respective unit operation.

Final treatment unit output water should be monitored using in-line, on-line or at-line analyzers where possible. Conductivity and TOC analyzers are usually used for these purposes. If on-line instruments are available, then off-line sampling may not be required for process control purposes. Attributes such as pH, chlorine, and ammonia may also be monitored if they are defined as CPPs.

Where multiple final treatment units are present in a facility, there should be a sample point before and after each. Each point should be monitored routinely for process control purposes. One sample point located between unit operations can serve to sample the outlet of one process and the inlet of another.

2.2.4 Storage Tanks

Sampling locations directly on a storage tank may provide valuable information if any microbial buildup (biofilm) is occurring in the tank and also allows testing of the stored water quality since water velocity through storage tanks provides minimal turbulence when compared to distribution lines. A sample valve installed for direct sampling from the storage tank may be required for validation or for diagnostic purposes and may or may not be used for routine sampling.

This Document is licensed to
National Taiwan University
Taiwan,
IP address: 140.112.15.
Downloaded on: 6/7/22 3:22 AM

Sampling valves located at storage tanks should be easily accessible for sampling and should minimize the risk of contamination of the sample and also the storage tank itself during sampling.

Tank water quality can also be assessed indirectly through monitoring of the primary generation supply (incoming water to storage), the loop return (water returning to storage), and the tank outlet which feeds the pumps and subsequently the use points. These samples indicate the water quality prior to entry to the storage tank, after returning from the loop, and at the storage tank outlet, which provides an indirect indication of the impact the storage tank is having on water quality.

For individual use only. © Copyright ISPE 2016. All rights reserved.

2.2.5 Distribution Systems (main loops and sub loops)

Quality control sampling locations in the main distribution system should include all POUs, with sampling occurring in a manner identical to how the water is used by manufacturing as discussed above. Process control sampling locations should be located before the first and after the last POU and at other specified locations. Sampling the loop return after the last POU ensures process control as this location may be the worst case location for water quality in the entire distribution system. Water systems with multiple return loops should have sampling locations in each of the return loops. For one way (non-recirculating) branch systems, all POUs should be sampled.

When temperature changes are required, the distribution system should be designed such that the pharmaceutical water is maintained at a higher pressure than heating/cooling media such as in a heat exchanger to prevent leakage from the non-sanitary utility to the sanitary side of the heat exchanger. If the pressure of the pharmaceutical water is lower than the heating/cooling media, then a double tube sheet heat exchanger design should be employed or the conductivity/TOC of the pharmaceutical water should be monitored through in-line instrumentation or regular testing of the water at a use point downstream of the heat exchanger.

Sampling location selection should also consider those locations in the distribution loop where possible contamination could occur, e.g., locations downstream of a heat exchanger, flow monitor, or other equipment.

Each sub loop returning to the main loop return should have a sampling point before the sub loop connects to the main loop return.

In the distribution loop of a pharmaceutical water system, all use point valves and sample valves should be of a sanitary design. Sample points in a laboratory system may not be sanitary and may contain dead legs such as may be present in a gooseneck faucet. In addition, sample points located between components in a water purification system and used for process control purposes may not be sanitary and may consist of ball valves or other valves that should not be used in a pharmaceutical water distribution system.

2.2.6 Points of Use

A Points Of Use (POU) is defined as the location where the water delivered from the water distribution system is actually used. POUs may be located on the main loop or in sub loops.

When sampling for quality control sampling purposes, the POU is typically not the valve on the distribution system itself from which the water is taken. Instead, it is the end of the delivery system that transfers the water from the distribution system to the process (e.g., sinks, autoclaves, washers, process tanks). Sampling at POUs should include all components and surfaces along this water delivery pathway (e.g., heat exchangers, hoses, fittings) that the water needs to travel through to reach the process.

This Document is licensed to
Miss Olga Chung
Taiwan,
Water Resources Agency
Thursday, August 04, 2016

When the outlet of a POU cannot be sampled, the next most representative sampling location should be identified. Rationale for the selection should be provided in the risk assessment. Validation and/or routine monitoring data should conclude that the sample location is representative of the POU.

Direct sampling of water from a drop, e.g., to a sink in a wash room where the water is normally used does not require any additional sampling locations as the POU serves both purposes. Water collected for sampling should be collected in a way that represents how water is normally taken from the system during routine use.

Every POU in a water distribution system that is not active should be locked out or tagged out of service and should be appropriately maintained to prevent contamination of the POU or the distribution system.

For individual use only. © Copyright ISPE 2016. All rights reserved.

2.3 Developing Sampling Plans

The frequencies and durations of sampling plans have historically coincided with the phases of the validation program for the water system. Using this rationale, the final phase of validation forms the basis for ongoing sampling frequencies with the goal of ensuring that the system is maintained in a validated state. However, the use of risk analysis tools coupled with periodic data review may be used to alter the frequency of sampling when the data provides overwhelming support for a change (increase or decrease) in sampling frequency. Regular data review should be documented as part of the planning process.

A sampling plan should define and document:

- Potential sampling points and the purpose for each
- Sample locations intended for continuous, regular, routine, periodic, or as needed monitoring
- Attributes to be tested at each sampling location
- The frequency at which samples are required for any given attribute
- The purpose and use of the resulting data for those attributes
- When sample valves and use point valves may be used as the same valve

Sampling plans are required for both new and renovated systems and may involve sampling locations throughout the water purification and distribution systems, including source water. During renovations or modifications, evaluate the changes that will be made and use risk analysis tools to help design a sampling plan appropriate for the significance of the modification and to assess the usability of the water during this time.

In specific circumstances, adequate scientific and statistical rationale may be required to not sample at an installed sampling point.

Sample locations installed for technical, investigative, or diagnostic purposes may not be included in a routine sampling plan and may not be sampled on a regular basis. The purpose and use of these sample locations should be defined, and they should:

- Be used on an as need basis
- Be suitably maintained
- Not pose a contamination risk to the system

Designating sampling locations For Information Only (FIO) or for future use should be avoided.

This Document is licensed to
Miss Olga Chung
Taiwan,
ID number: 1003015
Downloaded on: 6/ //22 3:22 AM

2.3.1 Background Philosophy

Sample plan development should be based on the expected sampling required during the life cycle of the system.

A typical life cycle scenario for water sampling activities may include activities during the following steps:

- Conceptual and detailed design
- Construction and installation
- Commissioning

For individual use only. © Copyright ISPE 2016. All rights reserved.

- Performance qualification (including worst case test and special scenario testing)
- Ongoing testing during production
- System changes and modifications (major and minor)
- Periodic System Evaluation (PSE)

Sampling guidance is provided in Tables 2.2, 2.3, and 2.4 regarding specific sampling locations, testing frequencies, and the type of monitoring or testing for various activities including commissioning and qualification/verification. This information may apply to new and renovated systems as well as some unique scenarios.

Automated electronic monitoring of conductivity and TOC can provide a comprehensive database from which chemical water quality trends may be observed over time. When analyzed, this information may allow for minimization or elimination of manual chemical testing of the water during routine operations. However, during the Performance Qualification, confirmation that the on-line or in-line readings are representative of water quality used should be verified if this data is going to be used for product release purposes. Where localized, outlet specific contamination could occur (e.g., POU heat exchangers), a downstream instrument, or grab samples would be required for release purposes.

For investigative purposes, *"TOC can be used as a process control attribute to monitor the performance of unit operations comprising the purification and distribution system".* [8]

Water may be delivered at several different temperatures for use at a single POU. The water sample collected from this point should be collected at the worst case temperature for microbiological control. For example, if water is delivered at both 65°C and 20°C (149°F and 68°F) from the same POU, the sample should be collected at 20°C (68°F).

2.3.2 Regulatory Requirements Related to Monitoring Frequency and Duration

No well-defined regulatory requirements exist regarding routine sampling frequency and duration. Various pharmacopoeias provide specifications for microbiological and chemical contaminants for the various grades of water, but do not define the frequency or duration of sampling. General expectations that can be found in various compendia and consensus standards are provided as follows:

USP General Information Chapter <1231> Water for Pharmaceutical Purposes, [9] states:

> *Water systems should be monitored at a frequency that is sufficient to ensure that the system is in control, and continues to produce water of acceptable quality"; and "The sampling plan should take into consideration the desired attributes of the water being sampled".*

This Document is licensed to

EP Guidelines to GMP Vol. 4 Annex 1 "Manufacture of Sterile Medicinal Products" [10] states:

Miss Olga Chung
Taiwan,
ID number 1002915

> *"Water sources, water treatment equipment and treated water should be monitored regularly for chemical and biological contamination and, as appropriate for endotoxins".*

The JP16 General Information, G8 Water, Quality Control of Water for Pharmaceutical Use, Section 4.2 Sampling [11] states:

Downloaded on 6/7/22 3:22 AM

> *"Sampling frequency should be established based on the data from validation studies on the system."*

ICH Q7 Section 4.20 [12] states:

> *"All utilities that could impact on quality (e.g., steam, gases compressed air .....etc.) should be qualified and appropriately monitored and action should be taken when limits are exceeded".*

For individual use only. © Copyright ISPE 2016. All rights reserved.

The 1993 US FDA "Guide to the Inspection of High Purity Water Systems" states [1]:

> *"The results of the Commissioning & Qualification are designed to demonstrate that all of the process steps and components within a Purified Water or Water For Injection system are capable of consistently providing water meeting the necessary water quality requirements".*

The FDA guide also provides the most specific guidelines for sampling frequency during system validation, but does not stipulate frequency beyond validation and recognizes that more than one approach may be acceptable.

To summarize, routine sampling should always be adequate for the intended purpose. It is necessary to look into the design and operational conditions for each specific water system with frequency and duration decisions based on RA including rationales for the decisions made.

2.3.3 Commissioning and Pre-validation

Water testing of the pretreatment, generation and distribution systems for PW and WFI systems during commissioning is an exercise in Good Engineering Practice. This activity may contribute to developing operational and maintenance practices and procedures that will be confirmed at a later time during qualification [13] and may provide baseline information for the system that may be useful in the future.

The testing activities may include chemical testing, or monitoring as appropriate, for specific unit operations and microbial testing to identify the indigenous microbial bioburden of the system. The duration of commissioning activities may vary depending upon the complexity and size of the system (e.g., 1 to 5 days).

Once the entire system is operating, the effluent of each unit operation should be monitored or tested at least once during the commissioning phase in order to provide baseline values for the system.

It may be necessary to perform extended pre-validation microbiological sampling activities in order to achieve process knowledge and assure system robustness.

2.3.4 Source Water

USP General Information Chapter <1231> Water for Pharmaceutical Purposes [9] states:

> *"To ensure adherence to certain minimal chemical and microbiological quality standards, water used in the production of drug substances or as source or feed water for the preparation of the various types of purified waters must meet the requirements of the National Primary Drinking Water Regulations (NPDWR) (40 CFR 141) issued by the U.S. Environmental Protection Agency (EPA) or the drinking water regulations of the European Union or Japan, or the WHO drinking water guidelines".*

This Document is licensed to
Miss Olga Chung
Taiwan,
ID number 1002015
Downloaded on: 6/7/22 3:22 AM

Various nomenclature may be in use across the globe for drinking water including: potable water, tap water, city water, and feed water, however, the quality intent remains consistently the same.

Note: there may be other additional regional/local area requirements or expectations.

WHO Technical Report Series No. 929, Annex 3 [14] recommends daily sampling of incoming potable water during the early validation phase of the pharmaceutical water system to verify its quality, but this may not be required in all areas of the world.

If there is little or no knowledge of the feed water quality at the system inlet, it is recommended to take daily samples for analysis including organism(s) of concern if such local requirement exists. If the potable water quality is already well known and the historical data shows good, stable water quality, a rationale can be made to perform less source water testing during the Performance Qualification (PQ) period. Typically, the potable/drinking water supplier is responsible for the potable water quality up to the property boundary, thereafter the responsibility is transferred to the

For individual use only. © Copyright ISPE 2016. All rights reserved.

property owner/site operator. Keeping in mind that pharmaceutical product manufacturers are ultimately responsible for end product quality, the burden of proof falls on the pharmaceutical manufacturer to assure, through suitable testing, and that potable water quality is maintained, as required, up to the inlet of the water system.

An impact assessment should be performed on potable water depending on the attributes, the treatment technology employed, and the end use of the water.

Depending on the end product or the process purifications steps etc. it may be possible to classify the potable water with different criticality levels. A RA with rationales should be made in order to define the criticality of the potable water. The outcome of the assessment will tell if Good Engineering Practices or validation/verification of the potable water supply is necessary.

2.3.4.1 Pretreatment

Pretreatment is a term that represents designated treatment steps, and typically prior to primary/final treatment. This may also be designated by the unit operations involved such as filtering, softening, or RO. It may be convenient to refer to pretreated water as feed water for the production of PW, WFI and/or pure stream (PS). When used as feed water for WFI or PS, pretreated water does not necessarily need to comply with PW requirements to ensure WFI/PS quality water is obtained. It should be noted that the Chinese Pharmacopoeia (ChP) [15] requires that supply water to a WFI still must comply with PW specification. The USP, EP, or JP does not require PW quality as feed for production of WFI.

In order to ensure that the pretreatment fulfills its purpose, sampling is carried out specifically for each purification step as mentioned in the *ISPE Good Practice Guide: Approaches to Commissioning and Qualification of Pharmaceutical Water and Steam Systems (Second Edition)* [13] and includes:

- For a sand, mixed media, or similar filter, the SDI may be measured before and after the equipment. The worst case sampling time would be just before the automatic back flush.
- For a water softener, hardness may be measured before and after the softener. The worst case sampling time may be immediately before softener regeneration.
- For a carbon filter, the chlorine concentration may be measured before and after the carbon filter. A worst case sampling time may be immediately before the back flush.
- For a RO system, conductivity may be measured before and after the RO unit
- For CEDI, the conductivity may be measured before and after the CEDI

This Document is licensed to

For all purification steps microbiological testing may be required, including before and after the RO if applicable. Acceptable microbiological levels should be defined for each purification step when applicable. There should at least be an Action Level with consideration for adding an Alert level if appropriate.

Miss Olga Chung
Taiwan,
No Number Provided

If, during RA, the pretreatment is determined to be a no impact system, samples should be taken for record purposes during Performance Qualification (PQ) of PW/WFI. There is no regulatory requirement, but if the pretreatment is determined to be indirect impact, a rationale should be developed for the sampling frequency during the PQ of the pretreatment.

Downloaded on: 6/7/22 3:22 AM

2.3.4.2 Purified Water

Depending on the number of POUs and sample points in the distribution system consideration could be given to rotational sampling for chemical tests since chemical contaminants are uniformly distributed in the water. It is generally recommended that several samples be taken from each use point during the PQ period. It should be noted that the worst case testing or special testing may influence the results and should be taken into account. The number of worst case tests chosen may influence the length of the PQ.

For individual use only. © Copyright ISPE 2016. All rights reserved.

Define the microbiological levels as required by intended use of the water. There should be an Alert Level and an Action Level. Testing frequency should be determined based on a suitable RA.

2.3.4.3 Water For Injection

POU sampling plans should rotate through all use points on the system, with the expectation that samples are collected on a daily basis from various use points, and that all use points are sampled on a routine basis based on risk analysis. System representative locations (e.g., supply and/or return) may be sampled on a daily basis for the process control purposes and to aid in the investigation of OOS results from individual use points.

During the PSE of a WFI (or PW) system, sampling frequency may be evaluated. Increases or decreases in sampling frequency should be based on historical data and should only occur when data indicates that more or less frequent sampling is justified based on performance of the use point or system. Sample frequency should not be arbitrarily adjusted without adequate scientific and statistical justification. A decrease in sampling frequency may result in increased regulatory scrutiny. Decreased sampling frequency also puts more product at risk during investigations because of longer periods between acceptable test results surrounding a deviant test result. In short, careful consideration should be given before decreasing sampling frequency relative to the increased number of product batches that will be put at risk.

2.3.5 Sampling for Performance Qualification/Verification

2.3.5.1 Purpose

The purpose of PQ/verification is to document that the stated water quality is delivered from the water system during:

1. Typical (nominal) use conditions
2. Worst case use conditions (system limits)
3. Special scenarios

and that the water complies with the requirements for the grade of pharmaceutical water type specified.

The period for the PQ depends on whether it applies to a completely new system or to modifications made to an existing system.

2.3.5.2 Typical Use Conditions (Nominal)

All PQs include a period of normal operation or simulated normal operation to demonstrate that the water quality during normal operation complies with the requirements for the actual specified pharmaceutical water quality. Normal operational usage ranges are defined with rationales.

2.3.5.3 Worst Case Use Conditions

A worst case scenario tests the limits of the system and is defined as the most extreme situations during the operation of the water system.

Below are a few examples of worst case conditions:

- Conditions of no water consumption (e.g., during a weekend or shut down) can result in a rise in the level of bioburden and conductivity
- Maximum use of the water confirms the system or unit operation is capable of delivering suitable water quality during a period of maximum delivery

This Document is licensed to
Miss Olga Chung
Taiwan,
ID number: 1002915
Downloaded on: 6/7/22 3:22 AM

For individual use only. © Copyright ISPE 2016. All rights reserved.

- If routine sanitization occurs, just before start of and after the sanitization

- After a maintenance procedure or a periodic event such as derouging and/or passivation

2.3.5.4 Special Scenarios

Special scenarios are situations which may occur during normal use either as unplanned or as planned scenarios. Often these special scenarios occur at inconvenient times, and it would be advantageous to validate these scenarios to avoid delays when they occur.

Validation of special scenarios can be part of the ordinary PQ of the pharmaceutical water system, or it can be performed as a specific PQ for only this purpose.

The validation of a special scenario may need to be performed in a worst case scenario and be documented by water quality sampling data. The outcome and conclusion of the validation, based on the data, can decrease time spent on the procedure during daily operation, when going from the special scenario to normal condition, due to less sampling, sanitization, etc.

Examples of special scenarios are provided below:

- Power failure: to document that the pharmaceutical water quality is unchanged after restarting after a defined period of time without any sanitization. A prerequisite for this test is no breach of integrity of the water system.

- Emergency or unplanned maintenance procedures: including unusual or unexpected component failure, system damage from internal or external action, or other situations that may require action but cannot be anticipated. Validation of all emergency or unplanned maintenance procedures is not practical.

Acceptance criteria should be set up for the special scenario properly because if it is not set properly, the PQ may fail. For example, if after a power failure the water retains its quality characteristics for three hours, then a power failure of up to three hours can be followed by normal operation without any sanitization, provided the system integrity is not otherwise compromised and will only require documentation of the actual duration of the power failure. A special scenario test may be performed for a longer period than the period used as the limit, if there is a need for incorporation of a safety factor. The three-hour power failure scenario mentioned above is only **an example** and that shorter or longer times may actually be validated.

2.3.5.5 Risk-Based Approach

A risk-based approach to C&Q/verification may be utilized to develop the monitoring and testing strategy. For example, risk analyses or impact assessments may be utilized to determine what equipment or functions of the water system are considered critical [13]. There may be unit operations or process steps within the generation or distribution system that require testing during initial commissioning as well as during ongoing routine operation (e.g., UV treatment, pumps, heat exchangers, etc.) that may not be considered critical.

This document is licensed to
Miss Olga Chung
Taiwan
Downloaded on 6/7/2023 2:23 AM

If determined to be non-critical, such equipment operation (e.g., multimedia filters, softeners) may be tested only during commissioning as part of the C&Q/Verification process [13]. Testing relating to the continued operation of a unit process may become part of a routine monitoring program based upon the impact to the system and the finished quality of the water as detailed in SOPs and subject to Good Engineering Practices (GEP). Frequency of routine testing could be adjusted based on the consistency of equipment performance. These tests assure proper maintenance and operation of the water system (e.g., regeneration of resin beds, sanitization of equipment, etc.) [13].

A CQA is a test defined as critical, based on the need to meet a specific compendia specification or other defined non-compendial requirements [13]. For example, conductivity may be a CQA of water when measured at the outlet of a PW generation system. Sampling the conductivity at this point would initially occur during C&Q/verification activities [13].

For individual use only. © Copyright ISPE 2016. All rights reserved.

A risk-based approach may also be utilized for determining the sampling approach to qualify changes made to an existing validated water system.

2.3.5.6 Performance Qualification Sampling

The PQ sampling protocol should describe the purpose, scope, and strategy (including justification). The sampling plan and the expected data from in-line/on-line measuring equipment (e.g., for temperature, pressure, conductivity, TOC) should be described in the protocol. The prerequisites and the acceptance criteria for the performance testing should also be stated in the protocol. The protocol should also consider adjusting sampling as appropriate based on production activities (e.g., if there is no production during weekends or if production varies significantly).

All stakeholders involved in the PQ, (production, engineering, quality control and quality assurance) should have an opportunity to review and comment on the protocol.

Communication and information sharing between the different participants before, during, and after the PQ are essential for efficient and successful qualification. Feedback on changes (e.g., missing samples) during the qualification should immediately be communicated to the relevant participants and documented in a deviation.

PQ sampling should be performed for a newly installed water system or for significant changes made to an existing qualified system. When minor changes are made to a qualified system, reduced sampling requirements may be considered. See the *ISPE Good Practice Guide: Approaches to Commissioning and Qualification of Pharmaceutical Water and Steam Systems (Second Edition)* [13] and the *ISPE Baseline® Guide: Water and Steam Systems (Second Edition)* [7] for additional information.

The following provides basic guidance regarding sampling plans during formal validation. Sampling during commissioning provides information that may be used to develop SOPs (e.g., for routine system operation, sampling, cleaning, sanitization, and maintenance).

Initial Sampling

Initial sampling is the most intensive and typically lasts from two to four weeks. Commonly, this period can be satisfied by monitoring and testing all sample and use points in the distribution system and selected other points daily for between 10 to 20 consecutive working days depending upon the design of the system (e.g., overall size, complexity, or number of use points). If the weekends involve no water consumption, the first day of the week may represent a worst case scenario for sampling.

During initial sampling, if consistency in operation is apparent, representative microorganisms that are visually distinct (i.e., physical colony characteristics) and detected during microbiological monitoring may be identified. Since all parts of a water systems are not always completely sterile by design, inherent populations of microorganisms may be found and these populations can vary from system to system. Typically, there are only a few distinct types of microorganisms that make up the resident population.

Your Personal Copy Purchased by
Miss Olga Chung
Taiwan
ID number: 1002915

Initial sampling activities are performed to demonstrate that the production and delivery of water consistently meets the specified compendial requirements. The initial sampling phase of PQ typically starts after Installation Qualification (IQ) and Operational Qualification (OQ) report approval. Initial sampling should demonstrate consistent quality before start of the next phase.

Intermediary Sampling

Downloaded on: 6/7/22 3:22 AM

Intermediary sampling is less intensive and may involve reduced sampling frequency. This phase typically lasts for 10 to 20 working days. The purpose of intermediary sampling is to further demonstrate consistent production and delivery of water (e.g., repeatability) of the required quality within the established ranges when using SOPs.

Intermediary sampling may provide additional worst case data since use points are not as frequently active.

For individual use only. © Copyright ISPE 2016. All rights reserved.

Extended Sampling

The extended sampling portion of the water system qualification activities continue for not less than the remaining balance of one year's time (one year minus the time used for initial and intermediary sampling) [13]. Collectively, the validation process includes an extended sampling study of the system and allows for the system to be challenged by evaluating its effectiveness of delivering water of acceptable quality despite seasonal variations in the potable water feed to the system, the slow development of the system's natural flora, and any other variations that may occur [1]. Typically, the extended sampling plan is reduced in frequency [13], from initial and intermediary sampling activities. Extended sampling monitoring typically forms the basis for the routine monitoring and testing program established once the validation has been completed. During this phase, there may be subtle shifts in the types of microorganisms inherently present within the system due to seasonal changes. Only those isolates from the microbiological testing samples that are visually distinct (i.e., physical colony characteristics) should be identified if not previously characterized.

Table 2.2: Examples of Suggested Source Water and Equipment Testing and Frequencies (Note A)

Equipment Sample Location	Suggested Commissioning and Pre-validation Tests and Frequencies	Suggested Initial Phase Tests and Frequencies	Suggested Intermediary Phase Tests and Frequencies	Suggested Extended Tests and Frequencies (Note B)
Potable Source Water Supply at Inlet to Pre-Treatment	Qualification of a new water source in the facility may involve initial and periodic testing of the source water to verify and ensure continuing compliance with potable water requirements. If the water is from a reliable source, at a minimum, obtain and review testing certificates from the supplier to establish full compliance with appropriate potable water regulations. Based on a risk assessment, it may be necessary to verify, via testing, the supplied water entering the facility complies with all potable water requirements. Local/country requirements should also be followed for water used in the manufacture of products sold in those areas.			
Media Filter	Confirm SDI re-duction	Quarterly or on-line for process control purposes, or at a frequency commensurate with the criticality of the process to the production of the desired grade of water.		
Organic Scavenger Bed	Confirm TOC re-duction	Quarterly or on-line for process control purposes, or at a frequency commensurate with the criticality of the process to the production of the desired grade of water.		
Water Softener	Confirm hardness reduction	Quarterly or on-line for process control purposes, or at a frequency commensurate with the criticality of the process to the production of the desired grade of water.		
Carbon Filter for Dechlorination	• Confirm free and total chlorine reduction • Monitor microbiological levels	• Quarterly or on-line for process control purposes, or at a frequency commensurate with the criticality of the process to the production of the desired grade of water. • Monitoring microbial levels may be important as needed for process control purposes.		
Chemical Feed for Declorination	• Confirm free and total chlorine reduction • Confirm sufficient dosage without overdosing (Note H)	Quarterly or on-line for process control purposes, or at a frequency commensu-rate with the criticality of the process to the production of the desired grade of water.		
Carbon Filter for Organics Reduction	• Confirm TOC reduction • Monitor microbiological levels	• Quarterly or on-line for process control purposes, or at a frequency commensurate with the criticality of the process to the production of the desired grade of water. • Monitoring microbial levels may also be important.		
Ultrafiltration for SDI or TOC Reduction (Note I)	Confirm SDI and/or TOC reduction	Quarterly or on-line for process control purposes, or at a frequency commensu-rate with the criticality of the process to the production of the desired grade of water.		
Deionization as a Pretreatment Process	• Confirm conductivity reduction • Monitor microbiological levels	• Quarterly or on-line for process control purposes, or at a frequency commensurate with the criticality of the process to the production of the desired grade of water (Note F). • Monitoring microbial levels may also be important.		

For individual use only. © Copyright ISPE 2016. All rights reserved.

Table 2.2: Examples of Suggested Source Water and Equipment Testing and Frequencies (Note A) (continued)

Equipment Sample Location	Suggested Commissioning and Pre-validation Tests and Frequencies	Suggested Initial Phase Tests and Frequencies	Suggested Intermediary Phase Tests and Frequencies	Suggested Extended Tests and Frequencies (Note B)
Reverse Osmosis	• Confirm conductivity and TOC reduction • Confirm pH levels if pH is adjusted • Monitor microbiological levels	• Quarterly or on-line for process control purposes, or at a frequency commensurate with the criticality of the process to the production of the desired grade of water (Note F). • Monitoring microbial levels may also be important.		
CEDI or other Deionization Process as a Final Treatment	• Confirm conductivity reduction • Confirm chemical reduction (Note D) • Monitor TOC and microbiological levels	• Conductivity and TOC daily or on-line (Note C) • Chemical testing daily (Note D) • Microbiological testing daily (Note E, F)	• Conductivity and TOC at a frequency between daily and weekly or on-line (Note C, J) • Chemical testing between daily and weekly (Note D, J) • Microbiological testing between daily and weekly (Note E, F, J)	• Conductivity and TOC at regular intervals or on-line (Note C), typically at least once per week • Chemical (Note D) and microbiological (Note E, F) testing at regular intervals, typically at least once per week
Ozone as part of the Purification System (Note F, G)	Monitor ozone and microbiological levels	• Ozone levels on-line daily • Microbiological testing daily (Note E, F)	• Ozone levels on-line • Microbiological testing between daily and weekly (Note E, F, J)	• Ozone levels on-line • Microbiological testing at regular intervals, typically at least once per week (Note E, F, J)
Ultraviolet Treatment for Microbiological Control or TOC Reduction (Note F, K)	Confirm microbio-logical reduction	Microbiological testing daily (Note E)	Microbiological testing between daily and weekly (Note E, F, J)	Microbiological testing at regular intervals (Note E, F), typically at least once per week
Ultraviolet Treatment for Ozone Destruction (Note F)	Monitor ozone levels	Quarterly or on-line for process control purposes, or at a frequency commensurate with the criticality of the process to the production of the desired grade of water.		
Ultrafiltration for Endotoxin Control (Note F)	Confirm absence of detectable endotoxin (Note L)	Endotoxin testing daily	Endotoxin testing between daily and weekly (Note J)	Endotoxin testing at regular intervals, typically at least once per week
Microbially Retentive Filtration (Note F)	Confirm acceptable microbiological levels	Microbiological testing daily (Note E)	Microbiological testing between daily and weekly (Note E, F, J)	Microbiological testing at regular intervals (Note E, F), typically at least once per week
Distillation	Confirm conductivity, TOC, endotoxin, microbiological, and chemical (Note D) content	• Conductivity and TOC daily or on-line (Note C) • Chemical testing daily (Note D) • Microbiological testing daily (Note E, F)	• Conductivity and TOC at a frequency between daily and weekly or on-line (Note C, J) • Chemical testing between daily and weekly (Note D, J) • Microbiological testing between daily and weekly (Note E, F, J)	• Conductivity and TOC at regular intervals or on-line (Note C), typically at least once per week • Chemical (Note D) and microbiological (Note E, F) testing at regular intervals, typically at least once per week

This Docum
Miss
ID num
Downloaded

For individual use only. © Copyright ISPE 2016. All rights reserved.

Table 2.2: Examples of Suggested Source Water and Equipment Testing and Frequencies (Note A) (continued)

Equipment Sample Location	Suggested Commissioning and Pre-validation Tests and Frequencies	Suggested Initial Phase Tests and Frequencies	Suggested Intermediary Phase Tests and Frequencies	Suggested Extended Tests and Frequencies (Note B)
Finished Water leaving Purification System	Confirm conductivity, chemical (Note D), TOC, microbiological, and endotoxin levels, if applicable	• Conductivity and TOC daily or on-line (Note C) • Chemical testing daily (Note D) • Microbiological testing daily (Note E) • Endotoxin testing, if applicable, daily	• Conductivity and TOC at a frequency between daily and weekly or on-line (Note C) • Chemical testing at a frequency between daily and weekly (Note D) • Microbiological testing at a frequency between daily and weekly (Note E) • Endotoxin testing, if applicable at a frequency between daily and weekly	• Conductivity and TOC at regular intervals or on-line (Note C), typically at least once per week • Chemical (Note D), microbiological (Note E) and endotoxin (if applicable) testing at regular intervals, typically at least once per week

Note A: This table lists several of the most commonly used treatment processes and may contain treatment steps that are not present in all systems. There may also be treatment processes in use that are not listed in this table. In all cases, the extent and frequency of sampling should be commensurate with the criticality of the process to the production of the desired grade of water.
Note B: The frequency and extent of sampling during the extended phase of the performance qualification typically serves as the initial frequency and extent for future validation maintenance testing, but is subject to adjustment based on a review of accumulated data and the use of risk analysis tools.
Note C: Verification of the equivalency of on-line readings to those obtained from sampling should be established in order to utilize on-line readings as suitable for quality control release.
Note D: Chemical testing may or may not be required as determined by applicable pharmacopoeias.
Note E: Microbiological identification testing may be performed to provide a profile of the resident micro flora within the water system.
Note F: Depending on the criticality of the process to the desired impurity/contaminant content of the water, less frequent sampling and testing may be performed for processes determined to be less critical.
Note G: Refer to the *ISPE Good Practice Guide: Ozone Sanitization of Pharmaceutical Water Systems* [16] for a more complete review of ozone and its use in the pharmaceutical industry.
Note H: A slight excess is desirable, but overdosing may create undesirable and unintended side effects.
Note I: In the event that ultrafiltration is used for microbial reduction, testing should reflect the impurity/contaminant reflects process operation.
Note J: Testing frequency dependent on criticality.
Note K: When an ultraviolet treatment unit is used for TOC reduction, organic molecules are oxidized and converted into molecules that actually increase the conductivity of the water. Typically, the increase in conductivity is not monitored because there is an ion exchange process immediately downstream of the ultraviolet treatment unit that removes the oxidized organic material, reducing both the conductivity and the TOC.
Note L: The limit of detection shall be commensurate with the level of endotoxin appropriate for the process.

This Document is licensed to

Miss Olga Chung
Taiwan,
ID number: 1002915

Downloaded on: 6/7/22 3:22 AM

For individual use only. © Copyright ISPE 2016. All rights reserved.

Table 2.3: Examples of Purified Water Distribution System Water Testing and Frequencies (Note A)

Purified Water Distribution System (Sample Location)	Commissioning Tests and Frequencies	Initial Phase Tests and Frequencies	Intermediary Phase Tests and Frequen-cies	Extended Phase Tests and Frequencies (Note B)
Downstream of Distribution Pump discharge prior to beginning in loop unit operations	Confirm conductivity, chemical (Note E), TOC and micro-biological levels	• Conductivity and TOC daily or on-line (Note D) • Chemical testing daily (Note E) • Microbiological testing daily (Note F)	• Conductivity and TOC at a frequency between daily and weekly or on-line (Note D) • Chemical testing at a frequency between daily and weekly (Note E) • Microbiological testing at a frequency between daily and weekly (Note F)	• Conductivity and TOC at regular intervals or on-line (Note D), typically at least once per week • Chemical (Note E) and microbiological (Note F) testing at regular intervals, typically at least once per week
Sample Port following the beginning in loop operations or the first use point	Confirm conductivity, chemical (Note E), TOC and microbiological levels	• Conductivity and TOC daily or on-line (Note D) • Chemical testing daily (Note E) • Microbiological testing daily (Note F)	• Conductivity and TOC at a frequency between daily and weekly or on-line (Note D) • Chemical testing at a frequency between daily and weekly (Note E) • Microbiological testing at a frequency between daily and weekly (Notes F)	• Conductivity and TOC at regular intervals or on-line (Note D), typically at least once per week • Chemical (Note E) and microbiological (Note F) testing at regular intervals, typically at least once per week
Critical Use Point (Note G)	Confirm conductivity, chemical (Note E), TOC and microbiological levels	• Conductivity and TOC daily or on-line (Note D) • Chemical testing daily (Note E) • Microbiological testing daily (Note F)	• Conductivity and TOC at a frequency between daily and weekly or on-line (Note D) • Chemical testing at a frequency between daily and weekly (Note E) • Microbiological testing at a frequency between daily and weekly (Note F)	• Conductivity and TOC at regular intervals or on-line (Note D), typically at least once per week • Chemical (Note E) and microbiological (Note F) testing at regular intervals, typically at least once per week
Non-critical Use Point (Note H)	Confirm conductivi-ty, chemical (Note E), TOC and micro-biological levels	• Conductivity and TOC daily or on-line (Note D) • Chemical testing daily (Note E) • Microbiological testing daily (Note F)	• Conductivity and TOC at a frequency between daily and monthly or on-line (Note D) • Chemical testing at a frequency between daily and monthly (Note E) • Microbiological testing at a frequency between daily and monthly (Note F)	• Conductivity and TOC at regular intervals or on-line (Note D), typically at least once per month • Chemical (Note E) and microbiological (Note F) testing at regular intervals, typically at least once per month

This Document is licensed to
Miss Olga Chung
Taiwan
ID number: 1002915
Downloaded on: 6/7/22 3:2[illegible] am

For individual use only. © Copyright ISPE 2016. All rights reserved.

Table 2.3: Examples of Purified Water Distribution System Water Testing and Frequencies (Note A) (continued)

Purified Water Distribution System (Sample Location)	Commissioning Tests and Frequencies	Initial Phase Tests and Frequencies	Intermediary Phase Tests and Frequen-cies	Extended Phase Tests and Frequencies (Note B)
Last POU or end of loop sample port (Note I)	Confirm conductivity, chemical (Note E), TOC, and microbiological levels Confirm any other physical attributes such as flow rate, temperature, pressure, etc. at minimum and maximum water use scenarios as defined in a User Requirement Specification	• Conductivity and TOC daily or on-line (Note D) • Chemical testing daily (Note E) • Microbiological testing daily (Note F)	• Conductivity and TOC at a frequency between daily and weekly or on-line (Note D) • Chemical testing at a frequency between daily and weekly (Note E) • Microbiological testing at a frequency between daily and weekly (Note F)	• Conductivity and TOC at regular intervals or online (Note D), typically at least once per week • Chemical (Note E) and microbiological (Note F) and other physical attribute testing at regular intervals, typically at least once per week

Note A: For any equipment that may be present as part of the PW distribution system, refer to Table 2.2.
Note B: The frequency and extent of sampling during the extended phase of the performance qualification typically serves as the initial frequency and extent for future validation maintenance testing, but is subject to adjustment based on a review of accumulated data and the use of risk analysis tools.
Note C: There are many variations on distribution system designs. This portion of the table is intended to capture considerations in “chase the tail” system configurations having no storage tank. In these instances, the incoming water to this system should be verified as suitable.
Note D: Verification of the equivalency of on-line readings to those obtained from sampling should be established in order to utilize on-line readings as suitable for quality control release.
Note E: Chemical testing may or may not be required as determined by applicable pharmacopoeias.
Note F: Microbiological identification testing is performed to provide a profile of the resident micro flora within the water system. Only those isolated from the microbiological samples taken at POU that are visually distinct (i.e., physical colony characteristics) should be identified to minimize redundancy. Microbial identification is not required where microorganisms with identical colony characteristics have been previously identified
Note G: A critical use point is defined as a point providing water that is either an ingredient or has direct product contact or one that is used for final rinse
Note H: A non-critical use point could be a point providing water that does not directly contact the product or process, such as pre-rinse or non-product contact use, or a use point that has been taken out of service and is no longer used for manufacturing but has not been removed from the system.
Note I: There may be additional equipment such as heat exchangers, ultraviolet units, etc., between the last POU and the storage tank. In these cases, it may also be appropriate to monitor each of these unit operations before the water is returned to the storage tank.

This Document is licensed to

Miss Olga Chung
Taiwan,
ID number: 1002915

Downloaded on: 6/7/22 3:22 AM

For individual use only. © Copyright ISPE 2016. All rights reserved.

Table 2.4: Examples of WFI Distribution System Water Testing and Frequencies

WFI Distribution System (Sample Location)	Commissioning Tests and Frequencies	Initial Phase Tests and Frequencies	Intermediary Phase Tests and Frequencies (Note B)	Extended Phase Tests and Frequencies (Note A, B)
Downstream of Distribution Pump discharge prior to beginning in loop unit operations	Confirm conductivity, chemical (Note D), TOC, endo-toxin and microbiological levels	• Conductivity and TOC daily or on-line (Note C) • Chemical testing daily (Note D) • Endotoxin testing daily • Microbiological testing daily (Note E)	• Conductivity and TOC at a frequency between daily and weekly or on-line (Note C) • Chemical testing at a frequency between daily and weekly (Note D) • Endotoxin testing at a frequency between daily and weekly (Note B) • Microbiological testing at a frequency between daily and weekly (Notes B, E)	• Conductivity and TOC at regular intervals or on-line (Note C), typically at least once per week • Chemical (Note D), endotoxin (Note B), and microbiological (Notes B, E) testing at regular intervals, typically at least once per week
Sample Port following the beginning in loop operations or the first use point	Confirm conductivity, chemical (Note D), TOC, endo-toxin and microbiological levels	• Conductivity and TOC daily or on-line (Note C) • Chemical testing daily (Note D) • Endotoxin testing daily • Microbiological testing daily (Note E)	• Conductivity and TOC at a frequency between daily and weekly or on-line (Note C) • Chemical testing at a frequency between daily and weekly (Note D) • Endotoxin testing at a frequency between daily and weekly (Note B) • Microbiological testing at a frequency between daily and weekly (Note B, E)	• Conductivity and TOC at regular intervals or on-line (Note C), typically at least once per week • Chemical (Note D), endotoxin (Note B), and microbiological (Notes B, E) testing at regular intervals, typically at least once per week
Critical Use Point (Note F)	Confirm conductivity, chemical (Note D), TOC, endotoxin, and microbiological levels	• Conductivity and TOC daily or on-line (Note C) • Chemical testing daily (Note D) • Endotoxin testing daily • Microbiological testing daily (Note E)	• Conductivity and TOC daily or on-line (Note C) • Chemical testing daily (Note D) • Endotoxin testing daily • Microbiological testing daily (Note E)	• Conductivity and TOC at regular intervals or on-line (Note C), typically at least once per week • Chemical (Note D), endo-toxin (Note B), and microbiological (Note B, E) testing at regular intervals, typically at least once per week

This Document is licensed to
Miss Olga Chung
Taiwan,
ID number: 1002915
Downloaded on: 6/7/22 3:22 AM

For individual use only. © Copyright ISPE 2016. All rights reserved.

Table 2.4: Examples of WFI Distribution System Water Testing and Frequencies (continued)

WFI Distribution System (Sample Location)	Commissioning Tests and Frequencies	Initial Phase Tests and Frequencies	Intermediary Phase Tests and Frequencies (Note B)	Extended Phase Tests and Frequencies (Note A, B)
Non-Critical Use Point (Note G)	Confirm conductivity, chemical (Note D), TOC, endotoxin, and microbiological levels	• Conductivity and TOC daily or on-line (Note C) • Chemical testing daily (Note D) • Endotoxin testing daily • Microbiological testing daily (Note E)	• Conductivity and TOC at a frequency between daily and weekly or on-line (Note C) • Chemical testing at a frequency between daily and weekly (Note D) • Endotoxin testing at a frequency between daily and weekly (Note B) • Microbiological testing at a frequency between daily and weekly (Note B, E)	• Conductivity and TOC at regular intervals or on-line (Note C), typically at least once per month • Chemical (Note D), endo-toxin (Note B), and micro-biological (Note B, E) test-ing at regular intervals, typically at least once per month
End of loop Sample Port or last POU (Note H)	Confirm conductivity, chemical (Note D), endotoxin, TOC, and microbiological levels Confirm any other physical attributes such as flow rate, temperature, pressure, etc. as defined in a User Requirement Specification	• Conductivity and TOC daily or on-line (Note C) • Chemical testing daily (Note D) • Microbiological testing daily (Note E)	• Conductivity and TOC at a frequency between daily and weekly or on-line (Note C) • Chemical testing at a frequency between daily and weekly (Note D) • Endotoxin testing at a frequency between daily and weekly (Note B) • Microbiological testing at a frequency between daily and weekly (Note B, E)	• Conductivity and TOC at regular intervals or on-line (Note C), typically at least once per week • Chemical (Note D), endotoxin (Note B), and microbiological (Note B, E) testing at regular intervals, typically at least once per week

Note A: The frequency and extent of sampling during the extended phase of the performance qualification typically serves as the initial frequency and extent for future validation maintenance testing, but is subject to adjustment based on a review of accumulated data and the use of risk analysis tools.
Note B: For water for injection systems, samples should be taken daily from a minimum of one POU, with all points of use tested weekly.[4]
Note C: Verification of the equivalency of on-line readings to those obtained from sampling should be established in order to utilize on-line readings as suitable for quality control release.
Note D: Chemical testing may or may not be required as determined by applicable pharmacopoeias.
Note E: Microbiological identification testing is performed to provide a profile of the resident micro flora within the water system. Only those isolated from the microbiological samples taken at points of use that are visually distinct (i.e., physical colony characteristics) should be identified to minimize redundancy. Microbial identification is not required where microorganisms with identical colony characteristics have been previously identified.
Note F: A critical use point is defined as a point providing water that is either an ingredient or has direct product contact or one that is used for final rinse.
Note G: A non-critical use point may be a use point that is no longer used for manufacturing and not planned for removal, one that is not currently used for manufacturing but may be in the future, or a point where the water from the point has no direct product contact such as sanitant preparation in a clean area.
Note H: There may be additional equipment such as heat exchangers, venturi, etc. between the last POU and the storage tank. In these cases, it may also be appropriate to monitor each of these unit operations before the water is returned to the storage tank.

This Document is licensed to
Taiwan,
ID number: 1002915
Downloaded on: 6/7/22 3:22 AM

[4] 1993 US FDA "Guide to the Inspection of High Purity Water Systems" [1]

For individual use only. © Copyright ISPE 2016. All rights reserved.

It may be possible to spend more time/sampling effort during commissioning and pre-validation in order to gain improved process knowledge and thereby execute initial and intermediary sampling each at the lower end of the recommended time frame.

The 1993 US FDA "Guide to the Inspection of High Purity Water Systems" [1] describes the suggested sampling frequencies and durations; however, the total period required for the actual PQ should be based on a documented risk evaluation with rationales for the decisions, but for not less than one year.

The FDA guide describes the need for validation of all steps involved in purification, particularly for new purification systems, due to the lack of historical data. Data from the validation will provide baseline information which can be used to evaluate operational trending changes, which in turn can provide operational details including that the system may be in need of maintenance.

POU sampling is expected; however, some POUs cannot be sampled for practical reasons or physical limitations, based on the POU design and/or installation. In the cases where POU sampling is not possible, a representative sample point may be substituted instead of the actual POU, however rationales for any substitute sampling sites should be established before start of the PQ.

When POU valves, which may be inaccessible for sampling once permanently connected, are initially installed these POU valves may be included in the initial sampling and compared with data from the substitute sampling points for confirmation of suitability.

2.3.5.7 Performance Qualification Reporting

At the conclusion of the PQ intermediary sampling, a summary report should be prepared that includes recommendations for the PQ extended sampling plan (sampling sites, parameters and frequencies).

At the conclusion of the PQ sampling (all portions) the final report, including any recommendations, should be made available to the participants of the PQ as well as to current and future users of the pharmaceutical water system, as this information may provide useful input regarding their daily use of the water and the associated SOPs, instructions, etc.

At least annually, as part of the PSE, data that has been generated from the sampling of a water system should be reviewed. This review affords the opportunity to see seasonal trends, make changes to the sampling frequency (i.e., daily to weekly or weekly to monthly) based on the accumulated data, and adjust Alert Levels and/or Action Levels previously established [13].

2.4 Sample Valve Design

This Document is licensed to
Chu Chi Chung
Taiwan,
ID number: 1002915
Downloaded on 6/5/23 3:23 AM

Good sample valve design should not allow contamination of the sample itself and should take into account both the internal function and external operation of the valve. Design considerations should include the method of connection, the length of the flow path, water retention within the valve body upstream of the seat/seal, and the amount of water held within the exit path after the valve has been closed. This water downstream of the valve is either trapped or held by capillary properties of water. Valve outlet configuration should allow for drainage while not obstructing the sampling process. Good sample valve outlet fitting design should not be so constructed as to facilitate water holdup in the valve resulting in microbial growth.

Any hardware added after the sample valve often poses a significant risk of contaminating samples by introducing extrinsic contaminants that are not representative of the actual water produced and delivered by the system.

Sample valves should also be suitable for use in the selected system such that they should be appropriate for the pressure, temperature, and flow of the system. Sample valves should also be selected based on the location within the system. For example, sample valves in the feed water, pretreatment, and even in sections of the primary treatment may not need to meet sanitary requirements. However, if used for microbial sampling, these valves should not allow contamination of the sample.

For individual use only. © Copyright ISPE 2016. All rights reserved.

Sample valves should be constructed of acceptable materials, have a suitable finish, and have a system compatible method of mounting/connection. Valves in the non-sanitary portion of the system may be glued, threaded, or otherwise installed provided they do not contaminate or otherwise compromise the sample. If valves with industrial connections (i.e., threads, flanges, etc.) are used for chemical sampling, they are not likely to cause concern. However, these same valves will likely contaminate microbial samples and should be avoided when sampling for bacteria.

Sample valves designed to sanitary requirements should be employed when feasible and appropriate. Sanitary diaphragm valves are a well-accepted standard within the pharmaceutical industry although other designs have been successfully employed. Ball valves and other non-sanitary valves should be avoided and only implemented when design constraints (high pressure, the requirement to meter flow rate, or other constraints) necessitate their use. In these cases, additional microbial control consideration may be required. Sanitary diaphragm valves may be the most robust and functional but offer less in the way of options often motivating users to consider alternate designs.

The most common connection for sample valves in the sanitary portion of the system is via sanitary clamp, regardless of whether used for chemical or microbial sampling, although some may be welded or occasionally mounted via other specialty fitting. A variety of different configurations are available for the outlet of the sample valve, but valves should be selected to be compatible with the sampling procedures and methods planned. Some sample valves have been designed to allow for the introduction and entrapment of alcohol or other sanitant to create an environment that is hostile to microbial growth.

The use of sanitary components becomes more critical after the final purification process of the pharmaceutical water generation system. Within the distribution system where the compendial water claim is established, sanitary design is required.

When sampling for quality control purposes, it is usually accepted that regulators prefer samples are taken from the actual POU where the water is delivered to the process. In instances where a use point is suitably hard piped as close as feasible to a process or vessel, a sample point should be incorporated as close to the actual POU as possible. If sampling between the outlet of the use point valve and equipment inlet is not possible, one option would be to incorporate a sample valve into the use point valve body upstream of the diaphragm, although readers were dissuaded from sampling for quality control purposes at this location earlier in the chapter. Care should be taken in the placement of all sample valves to ensure the location supports sampling while minimizing the opportunity for contamination, as well as addressing ergonomic and safety issues.

A significant difficulty associated with the FDA preference for sampling at the use point is the likelihood that process piping sizes and/or pressures, and their connections, may be considerably larger than the ideal size for sampling. This creates the dilemma of whether to sample from the actual larger process connection or to make an adaption for sampling purposes. Since neither is ideal, the addition of an adapter can aid the sampling process provided it does not compromise the sample taken.

This Document is licensed to
Miss Olga Chung
Taiwan,
Mar 31, 2016

Sample valves are available in straight through and angle body configurations. Selection of the most suitable design should be by individual location. Correct valve design at each location is critical so as to avoid the need to make modifications at a later time.

There have been many observed cases of sample valves located in ways that make sampling impossible because sample containers cannot access the port, or because the outlet points upward. Numerous cases of sample valves creating safety hazards to samplers have been documented. Some valves may be more likely to retain water in the outlet so it may be prudent to purchase and test a particular valve design prior to installing it system wide.

Downloaded on: 6/7/22 3:22 AM

Sample valve design should also take into account other issues such as water temperature and sample location within the pipe (near the sidewall or midstream). In heated systems, valve handles made of stainless steel will often conduct heat making the valve handle too hot to operate. In this case alternate valve handle materials, such as plastics that can tolerate elevated temperatures, should be considered. Valve seals, such as “O” rings should also be suitable for the intended application.

For individual use only. © Copyright ISPE 2016. All rights reserved.

Valve design should take into account both the internal and external issues related to sampling. Valves mounted onto tee fittings should always utilize short outlet fittings or fittings that incorporate a valve mount flush to the interior wall or into the flow mainstream. When it is desirable to take a sample further into the water stream, as in larger tube sizes, valves with an integral extension that protrudes into the process stream may be considered. These valves also pose a greater difficulty for cleaning so careful evaluation is critical to success.

Valve configurations vary widely and are available with alternate outlet connections ranging from hose barb, to sanitary clamp, to plain end, and are available in a variety of sizes. Valve inlet fittings, available in welded or clamp, can be provided to allow connection to 1/2, 3/4, 1, 1 1/2, and 2 inch OD supply line sizes (and may be ordered in larger sizes when required). Inlet fittings are also available eccentrically mounted to facilitate draining when used for dual purposes. Common configurations include:

a. 1/2" clamp inlet with 1/2" barb outlet

b. 1/2" clamp inlet with 1/4" barb outlet

c. 3/4" to 2" clamp inlet with 1/2" or 1/4" barb outlet

d. 1/2" clamp inlet with barbed outlet with separate or onboard port for sanitant injection

When sampling hot water and clean/pure steam it is often necessary to reduce the temperature for safety reasons or based on compatibility with sample containers, media, etc. Cooling the water or condensing the steam reduces safety concerns and simplifies sampling but adds an inherent risk of microbial contamination. Hence, sampling through suitable heat exchange equipment using methods that minimize risk are appropriate and highly recommended. Equipment should be suitably sized to help to ensure successful operation and maintaining that equipment so as to not add contamination is paramount.

2.5 Sampling Techniques

2.5.1 Obtaining Representative Samples

The goal of any sampling program is to obtain samples that accurately reflect the contents of the larger system and/or to ensure water of suitable quality is used for manufacturing or other designated purposes. The vast majority of chemical constituents are uniformly distributed and relatively easy to sample with a minimal amount of rinsing and flushing. Sampling technique, including flushing, that is representative of use should be performed, as bacterial and endotoxin contaminants will not be uniformly distributed because bacteria primarily adhere to surfaces in a system. The 1993 US FDA “Guide to the Inspection of High Purity Water Systems” [1] states that WFI should essentially be sterile and that the allowance of bacteria counts of 10 cfu per 100 ml are to account for sampling error.

This Document is licensed to
Miss Olga Chung
Taiwan,
Downloaded on: 6/7/22 3:22 AM

2.5.2 Use of Appropriate Sample Containers

When taking samples, efforts should be taken to ensure that sampling containers do not introduce measurable amounts of the contaminant being monitored to the sample. This implies that several different sample containers may be required to sample any given location. For example, sampling for TOC should be done in certified low TOC containers since many containers will introduce extractables that contribute to the TOC value of a sample and increase the results. On the other hand, bacteria samples should be taken using pre-sterilized containers, endotoxin samples should be taken in depyrogenated or pyrogen free containers, and testing for conductivity should be accomplished using plastic containers.

Sample container materials of construction should meet the same requirements as the system being sampled, specifically that they be non-additive, non-reactive, and non-absorptive. Sample containers should allow samples to be collected in an aseptic manner and minimize splashing and aeration upon collection. They should provide an adequate sealing mechanism and provide a means to record pertinent sample information. Sample information may include, but is not limited to, sample location/ID, date and time of acquisition, name of sampler, and testing to be performed.

For individual use only. © Copyright ISPE 2016. All rights reserved.

The collected sample should be able to quantitatively reflect the same attributes present in the water at that sampling location. Attributes and their levels in the sampled water should not substantially change during confinement and storage in the sample container. The selection of container and closure materials should be carefully considered, as the trace levels of the pertinent attributes in the water can be changed substantially by anything the water touches, including the air.

The suitability of materials of container construction is determined by the attributes that will be tested. The walls of the container and the closure seal can positively contribute to the attribute of interest through leaching or desorption, increasing the attribute concentration to a higher value, or to a detectable level where it was formerly undetectable. The attributes of interest can also be reduced in concentration by when they are adsorbed to the internal surfaces of the container. Adsorption is typically a contact time phenomena based on the length of time the water is held in the container.

When the attribute of interest is conductivity, the container should not substantially leach conductive ions. Therefore, clean plastic containers represent the best choice. Glass tends to leach sodium and silicate ions from its surface, so it is usually not a good choice except for samples having only a brief residence time within the container. Cleanliness should be considered, as residues from past uses, including soap residues, can have a significant and detrimental impact on the test result. Another potential impact on the sample's conductivity is atmospheric carbon dioxide (CO_2). It is almost impossible to prevent at least some CO_2 intrusion during the sampling process, even if the container is filled smoothly and rapidly to the brim to minimize any trapped air headspace. A water sample will almost always give a higher conductivity than the on-line conductivity readings from the system at the time the sample was collected. The number of intruding ions from the dissolved CO_2 gas and bicarbonate ions (HCO_3^-) to which it equilibrates may not be sufficient to cause an OOS value, but there can be sufficient conductivity generated to mask the conductivity trends of the system, making performance trending and process control much more difficult from sampled conductivity measurements. Conductivity based process control is best achieved using on-line conductivity or resistivity instrumentation.

When the attribute of interest is TOC, the container surfaces should not leach substantial amounts of organic residues. The container of choice may be glass or plastic provided that they are certified low TOC. Many plastics leach sufficient organics to substantially affect the final test result. However, any container can leach organic residues associated with even the most careful handling and scrupulous cleaning. When selecting containers for TOC testing, it is best to use low TOC containers that are compatible with the TOC instrument's sampling/staging mechanisms. Reusing these containers for TOC testing can pose challenges because of organic residues deposited on the internal container surfaces by the cleaning and drying practices. For example, these containers should never be exposed to cleaning soaps nor should they ever be dried by placing on a drying peg board or absorptive toweling. Even imperceptible organic vapors in the laboratory and glassware washing area are sufficient to compromise the trace quantitative analyses that TOC measurements are. It may be difficult to achieve the necessary container cleanliness to be suitable for TOC testing, so using specially cleaned low TOC containers from a commercial vendor is generally a recommended practice.

This Document is licensed to
Alex Hsu Chang
Taiwan,
Downloaded on 6/7/22 2:22 AM

Note: no sampling container can guarantee zero TOC leachables. As a general rule, the level of container cleanliness should be commensurate with the expected TOC levels in the sample. TOC readings taken using on-line instrumentation will always be lower than those obtained by sampling using containers.

The materials of construction for microbial sampling containers have few functional restrictions. A container constructed of any material that can be sterilized is generally adequate. However, the bacteria in water samples tend to be surface seeking – the first step in biofilm formation. The rate of bacterial adsorption to the container walls could theoretically be affected by the chemical and topographic nature of the container surface. The microbial adsorptive properties of hydrophilic (glass) versus hydrophobic (plastic) and smooth versus rough surface differences are usually imperceptible over the typical elapsed period of time between sampling and testing, but there may be exceptions. For instance, the use of pre-sterilized plastic tissue culture bottles that have a coating to encourage tissue cell adhesion and proliferation is not recommended since it is hypothetically possible that this coating would encourage microbial cell adhesion as well as proliferation. These may not be labeled substantially differently from bottles without such a coating.

For individual use only. © Copyright ISPE 2016. All rights reserved.

In microbial sampling, reused container cleanliness should be considered. Any growth promoting residues from the previous uses of the container could promote growth of bacteria collected in the water sample, thus affecting the actual microbial counts. Microbial sample containers should be clean and free of past use residues.

The sample container material of choice for endotoxin testing is glass (or a suitably evaluated plastic alternative) because glass can be definitively depyrogenated by heat treating to 250°C or higher for at least 30 minutes. Plastic containers are not generally recommended for endotoxin sampling since the hydrophobic surface could encourage micelle adsorption to the surface resulting in removal of endotoxin from the bulk fluid phase. Such containers can only be depyrogenated by exhaustive rinsing and/or chemical processes which are usually not feasible for a user to implement, nor are they reliably validatable. Sterile disposable plastic labware available for microbial water sampling should be pyrogen-free; however, they should be used for water sampling for endotoxin testing with caution as it may not be possible to establish their pyrogen free nature. Endotoxin surface adsorption phenomenon is also possible with prolonged storage.

Many other attributes could be tested that might be critical to the suitability of the water for use as well as the performance of a purification process. Examples include, but are not limited to the following:

- Particulates
- Specific heavy metal ions or other elemental impurities
- Specific microbial contaminants
- Trace sanitizer residues
- Nitrates
- Ammonia
- Hardness
- Free and/or total chlorine
- Sodium
- Silica
- Turbidity
- SDI
- Other EPA Drinking Water Regulation contaminants

This Document is licensed to
Miss Olga Chung
Taiwan,
ID number: 1903915
Downloaded on: 6/7/22 3:22 AM

2.5.3 *When Hoses Are Involved*

When the sample port is located in a tough to reach spot, hoses may be employed to make sampling easier. When sampling from a POU for quality control purposes, sampling should accurately reflect the way that water is removed from the system during actual production use using the actual manufacturing equipment employed (including hoses). Regardless of the purpose of sampling, it should be understood that while hoses may be utilized, they provide an opportunity to introduce contamination to the samples. For example, if a hose is not disconnected and allowed to fully drain and dry between uses, bacteria may grow inside the hose that would introduce contamination to the sample. Hoses used for sampling for process control or other purposes should be installed immediately before samples are taken and then removed immediately afterward or within a qualified period.

For individual use only. © Copyright ISPE 2016. All rights reserved.

2.5.4 Training

Personnel taking samples should be trained on proper sampling technique. The vast majority of variations in results can be traced back to variations in how samples are taken. Ideally, one person would be designated to take all samples and their technique would be regularly reviewed. Typically, this is not practical and several samplers are typically involved. Without rigorous training and continual review, variations in water quality data may reflect variations in sampling technique rather than actual variations in water quality. This introduces increased variability to collected data.

2.5.5 Use of Common Sampling Points for Process Control and Quality Control

Sampling for process control purposes attempts to obtain samples of water that accurately reflect what is flowing through the pipe. Sampling for quality control purposes is focused on accurately reflecting how the water is used in production in order to duplicate the quality of water used during manufacturing. In some cases, a single sampling location may be used for both process and quality control purposes.

2.5.6 Sampling from Sinks

Sink use point sampling should represent the actual use of the sink use point. Sampling should match the procedural use of the sink, including any flushing requirements and attachments or hoses used to direct the water.

2.5.7 Sample Point Preparation Before Taking Samples

Samplers should understand that preparation of the sample point for one type of analysis may introduce extrinsic contamination for a subsequent sample taken minutes later from the same point. The order of sampling should be clearly defined and the reasons for this order should be clearly understood by the sampler. Sample point preparation may involve flushing, spraying, disinfecting, or other treatments. For example, spraying and disinfecting a sample point with isopropyl alcohol (IPA) prior to taking a sample for bacterial testing could increase the value of a sample taken subsequently for TOC measurement.

Sample point preparation is usually performed in order to permit taking an accurate bacteria and endotoxin sample. Samples for bacteria and endotoxins should be taken last in the sequence and samples for chemical constituents, metals, and TOC should be taken first.

2.5.8 Sampling Technique

Sampling technique is dictated by the purpose of sampling. If sampling for process control or diagnostic purposes, any sample point contamination should be thoroughly flushed away so that the sample accurately represents the water flowing inside the piping system. If sampling for quality control purposes or to meet regulatory requirements or consensus standards, the goal is to sample in a way that exactly replicates the way that water is used for manufacturing.

This Document is licensed to
MS Chai Jun
Taiwan,
Downloaded on: 6/7/23 3:22 AM

When sampling for process control or diagnostic purposes, several different types of valves could be encountered and may necessitate an alteration of the sample process. An example sampling technique consists of the following steps

1. Locate a proper size receptacle or drain to receive the water being flushed from the valve to be sampled. The sample valve flushing procedure should not be modified to fit an available receptacle (make sure that the receptacle is large enough to receive the appropriate flush)

2. Slowly open the valve until it is fully open (e.g., or meets 8 FPS)

3. Allow water to flow at full force from the valve for at least 30 seconds then slowly close the valve to reduce the flow to a rate that is comfortable for taking the type and number of samples required.

4. Collect samples for any required non-microbial constituents (e.g., conductivity, TOC) in appropriate containers.

For individual use only. © Copyright ISPE 2016. All rights reserved.

5. If the sample valve is to be sprayed with IPA for bacteria and/or endotoxin samples, slowly close the sample valve.

6. Spray the outlet of the sample valve with disinfectant.

7. Wait 30 seconds

8. Repeat steps 2 to 3 and collect bacteria and endotoxin samples in appropriate containers.

9. Close sample valve and post treat if appropriate to remove or displace any retained water in the outlet flow path.

10. Ensure samples are labeled and handled/processed properly.

Alternatively, when sampling for quality control purposes, the goal is to sample in a way that exactly replicates the way that water is used for manufacturing (e.g., with manufacturing's hoses, pre-use flushing rate and duration, SIP, sample water temperature). Water should be sampled as close as physically possible to the process equipment. As a general rule, and to minimize contamination during production water use, it is recommended that water be flushed (e.g., for at least 30 seconds at a velocity of at least 8 feet per second or an alternative validated technique) through the outlet and connectors to ensure that bacteria are flushed from the walls of the hose, discharge piping and outlet valve prior to use. Repeatability of flushing (both time and rate) should be achievable for water quality and data consistency. Unless the manufacturing use point valve is sprayed with a disinfectant such as IPA prior to use/ manufacturing, that valve should not be sprayed with IPA prior to sampling, and similarly for flushing.

2.5.9 Sample Point Treatment After Taking Samples

If the sample point is used to collect samples for bacteria or for endotoxin testing, treating the sample valve after sampling should be performed, as water can become trapped downstream of the sample valve, creating an exposed location where bacteria and biofilm can grow before the next sample is taken from the sample point.

Once all microbial related samples have been taken, the downstream portion of the valve and the outlet path should be dried using alcohol or another suitable disinfectant (compatible with materials of contact and appropriate for use). The disinfectant would be injected or sprayed into and onto the sample valve and allowed to evaporate. Alternatively, special valves that allow for sanitant to be charged into the valve and then capped retaining the sanitant may be considered. In closed systems, typical of many POU installations, sterile compressed air may be utilized to remove residual moisture downstream of a sampling point.

The capping of wet sample points after sampling should be avoided because it traps water and allows bacteria and biofilm growth between samples. Expelling water from the outlet of the sample valve by flooding the valve outlet with alcohol following sampling and/or before capping is recommended because it excludes water and prevents microbial growth in the sample valve between samples. Whenever this practice is utilized, thorough flushing of the sample valve during subsequent sampling is required to prevent alcohol from impacting TOC or microbial results.

This Document is Licensed to
Miss Olga Chung
Taiwan,
Downloaded on 6/7/2023 3:23 AM
Date Downloaded on 6/7/2023 3:23 AM

2.6 Handling of Samples

If sample analysis is being performed by an in-line or on-line instrument or analyzer, then the sample fluid never leaves the closed confines of the water system en route to analysis. The analyzed water essentially never experiences the chemical and microbial contamination hazards introduced by manual sampling from the water system and transport to the analytical area or off-line laboratory instrument.[5] Where justifiable, based on the nature of the attribute to be tested and the location in the water system, having in-line or on-line instrumentation that can measure a homogeneously distributed attribute is generally preferable to collecting a sample and transporting it to an off-line analyzer in a remote laboratory.

[5] The only exception is if the fluid to be analyzed has an inordinately long or stagnated contact time within side stream tubing, a multichannel valve or a manifold on the way to an on-line analyzer.

For individual use only. © Copyright ISPE 2016. All rights reserved.

Sampling for off-line analysis in the laboratory can affect the measured quality of a given attribute, exposing it to external contamination by any of several routes:

- Through manual sampling procedures that could be poorly performed due to negligence, lack of training or inadequate procedural detail
- From transfer between the closed confines of the water system and the sample container
- Through contact of the inside of the sample container with the outside surface of a sample port
- During its transport between the sample location and the laboratory
- During storage prior to analysis
- Through sample container opening and re-closure in the laboratory
- During transport and/or restorage should additional attribute tests need to be performed from the same container or for a later repeat test or investigative retest

Significant handling involving human interventions into the sampling container may require extended contact time between the sample and the container, strongly suggests that issues associated with sample handling are addressed and resolved during the planning process and before samples are collected. The human issues may be more subtle than extractables or leachables from the container and can ultimately influence the results obtained from the sample.

Regardless of the attributes of concern for a given sample, the sample collection, transport and storage processes share the same general concerns as the specific attributes. These sampling issues should not significantly affect the quantitative levels of the attributes over the samples elapsed time within the container or through handling.

The transport of the samples to the laboratory for testing should be executed so that sampling container contents spillage or coolant seepage into samples does not occur. This may involve protective bagging of sample containers and/or the application of additional barriers (such as protective tape) to protect the sealing surfaces from leakage or seepage during the rigors of transport. In addition, depending on the attributes of concern for the sample and its intended testing destination, temperature control may also be a consideration if it is necessary to preserve the attributes of the sample during the transport period. This may involve the use of insulated containers, as well as the use of coolant materials such as waterless cold packs. The use of water and ice should be avoided since sloshing and seepage of this melting coolant into inadequately sealed sampling containers could occur. Similarly, the use of ultra-cold coolants should be avoided since the freezing of the sampled water in the container is usually contraindicated for most types of samples. The intent of the coolant is to bring the temperature of the samples to a reasonably controlled range, usually lower than the ambient conditions of the original sample. However, during winter months or air cargo shipments, the ambient temperature of the shipping process could freeze the samples, so protection from external low temperatures should also be factored into the temperature control process during transport. Once the sample is sealed into the container and its transport begins, its storage in that container also begins; prompt transport to the testing facility should be considered.

The duration and temperature of sample storage is a hotly debated issue, especially for attributes that could quantitatively change during that storage period. For this reason, understanding the mechanisms behind those changes can help the user craft storage conditions that will least affect the attribute of concern. The choice of sampling container materials may have an impact on the rate of those changes. In general, the less time the sampled water spends in the container, the more closely it will approximate its original quality at the time of sampling. Relevant pharmacopoeias should be consulted, as applicable, for guidance.

For individual use only. © Copyright ISPE 2016. All rights reserved.

Suggested sample handling practices are discussed in the following sections. If deviating from these suggested practices with longer storage times or different temperatures, an assessment should be performed to determine whether more extreme storage practices will have an impact on the samples. This may be considered a validation of the user's practice. However, getting less than detectable values for both analyses does not validate the user's storage conditions. Non-zero values are usually needed from both analyzed samples in order to confidently validate the user's storage practice. If sample storage practices are within the guidelines established, then it may not be necessary to validate the practices.

2.6.1 Conductivity

When a water sample for off-line conductivity testing is collected, container cleanliness and atmospheric CO_2 are the two greatest risks to preserving the original conductivity of the sample. If single use, disposable containers are not used, then reused container cleanliness should be controlled and assured by routine procedures. Trace conductive residues can leach from glass container surfaces. The solubility of the leaching materials is relatively poor, so the leaching process could be relatively slow, but it is nevertheless a factor, particularly if glass containers are used and if the conductivity of ultrapure water is being assessed against tight specifications. Sample containers should be filled as much as practical to minimize air entrapment in the headspace which may allow additional atmospheric CO_2 to impact the sample.

Plastic containers tend to avoid the ionic leachables associated with glass, but these containers are moderately permeable to atmospheric CO_2. Permeation is a slow process that occurs over time and has a detectable impact on the conductivity of the samples. However, atmospheric CO_2 exposure during sampling collection will be the overwhelming influence on conductivity.

As a best practice, samples for conductivity testing should not be refrigerated during storage while waiting testing, because it increases the time required to run the Stage 2 conductivity test. Sample testing should occur as soon as possible.

2.6.2 Total Organic Carbon (TOC)

A significant impact on the TOC of a solution during sample storage can be from organic residues leaching from the container or closure surface. If reusable containers are used for TOC sampling, then the risk of leachable residue is much greater than if single use, low TOC sample containers are used. Refrigeration may slow this rate of leaching. If certified low TOC containers are used, only that certified amount of TOC will leach into the sample fluid no matter how long it is stored. However, prolonged storage can lead to alteration of the soluble TOC interaction with the container, hence extended storage should be supported by a risk analysis and supporting data.

For TOC samples only, if certified low TOC containers are used, the samples should be suitable for up to 2 to 3 days at room temperature or when refrigerated without suffering any substantial increase or decrease in TOC level. If reused sample containers are employed, the amount of TOC leaching into the water is unknown as is the leaching rate, so testing these sample containers within a few hours after collection is advised.

Non-Commercial Use Only
Miss Olga Chung
Taiwan,
IP address: 1.34.223.5
Downloaded on 6/7/22 3:22 AM

2.6.3 Microbial Count

Various maximum hold times and storage temperatures are recommended by different references. The concern is that either microbial proliferation or microbial loss due to adsorption or starvation could occur if the elapsed time after sample collection is more than a few hours. Generally, refrigeration is recommended if testing cannot commence within about 2 hours of sample collection. Refer to the USP <1231> [9] or other relevant compendia for the markets being served for guidance regarding refrigerated hold times.

2.6.4 Bacterial Endotoxin

Because at least a portion of the endotoxin in a sample could be of a particulate nature, such as whole cells or cell wall fragments in a water sample, the same guidelines as for microbial testing should be followed for endotoxin test samples.

For individual use only. © Copyright ISPE 2016. All rights reserved.

2.6.5 Other Attributes

Storage conditions for a sample requiring other attribute tests are dependent on the specific needs of the attribute to maintain the integrity of its original quantitative values. Analyte susceptibilities may include:

- Loss or increase due to container surface adsorption or leaching
- Natural chemical or physical degradation
- Microbially related processes

These susceptibilities should be understood in order to establish appropriate sample storage conditions between sampling and testing.

2.6.6 Avoiding Extrinsic Contamination Through Closure Design

When a sample is collected, the ease and cleanliness of opening and closing the sample container should be considered. This activity occurs multiple times between sampling and eventual analysis in the laboratory. The process of opening and closing the container during sampling has specific precautions that should be exercised to avoid extrinsic contamination, particularly with the handling of the removed closure and the potential splashing of the water while a sample is being collected. When a sample arrives at a laboratory for testing, it is opened and then closed for the removal of an aliquot of water. This presents different concerns than the sample collection process, especially if the container will be entered and reclosed multiple times for multiple tests.

The simplicity of container opening and closing (including sanitary concerns, if for microbial testing) should be considered to help to minimize extrinsic contamination that could alter test results. Generally, sample containers have a lid or cap that can be easily removed; however, the placement of fingers near, or on, the sealing surfaces of the closure should be avoided to prevent a source of extrinsic sample contamination, even when the hands are gloved and alcohol sanitized. Ideally, fingers should be able to grasp and open the closure at a reasonable distance from any sealing surface to avoid inadvertent contact with the sealing surfaces or the inside of the container when opening and reclosing the container.

Sealing surfaces of the container should not contact the potentially contaminated external surfaces of the container or closure during opening and closing, as may occur with folded over flexible containers. In the case of microbial contamination, a sanitized surface, such as gloved hands or the external container surface, should not be assumed to be sterile. A minimal level of extrinsic contamination in a test may be sufficient to cause concern, particularly where the typical microbial counts are zero.

2.6.7 Chain of Custody

This Document is licensed to
Miss Shu Y Hsu
Taiwan,
ID number: 1002915
Thursday, October 20, 2016

Maintaining a chain of custody provides documented proof of where the samples are and have been and under what conditions, at what times, and handled by whom. This may be a significant consideration when there is an excursion in the value of one or more attributes. The sample's history could have a bearing on how to interpret the test results. Chain of custody information needs to be proactively collected on every sample in order to have a retrospective interpretation.

Chain of custody may also be a consideration when expected samples are missing, perhaps allowing the samples to be found and to understand what conditions they have been exposed to, in order to help assess their suitability before potential testing. Chain of custody should also be considered for samples being sent to contract laboratories or sister sites within the same company for testing.

If the test results for samples become included in any legal disputes, chain of custody should be able to verify that the samples are legitimate and have maintained their integrity. The user may not know this in advance.

For individual use only. © Copyright ISPE 2016. All rights reserved.

2.7 Parametric (Real Time) Release

Releasing products in real time based on monitoring and control of manufacturing in process parameters critical to finished product quality has been a long-term goal for pharmaceutical water systems. This approach employs Process Analytical Technology (PAT) and Statistical Process Control (SPC) and should be properly validated. It has been successfully used for product manufacturing processes to eliminate or greatly reduce the need for finished product testing and usually involves on-line and in-line analytical technologies to provide timely in process data on critical in process parameters that could affect the finished product quality. Generally, these parameters should be continuously monitored, so that deviations from acceptable ranges can be detected and process adjustments made to maintain the acceptable finished product quality. Speed and timeliness of these analyses is crucial, which is why real time measurements are needed for real time product release.

The traditional and untimely alternative for release of pharmaceutical waters is to collect water samples and send them to a lab for testing prior to release, all by human mediated procedures. Eliminating the delays and potential for data aberrations caused by human interventions and procedures is the goal of Real Time Release (RTR) for water. Although desirable, RTR may not be possible in all scenarios.

2.7.1 Chemical Attributes

Since 1996, with the changes made with USP 23rd Edition, 5th Supplement [17], USP has facilitated the use of on-line monitoring of TOC (USP <643> [8]) and in-line monitoring of Conductivity (USP <645> [18]) for satisfying the water's compliance with PW and water for injection monograph requirements. The only provision for on-line and in-line release in both test chapters is that the data from these on-line, in-line, and at-line instruments should be representative of those attributes as measured at the POU. If used solely for process control, there is no need to establish this POU equivalence. Chemical attributes are homogeneously distributed hence the values measured at remote locations in a simple water distribution system usually are identical to the values measured at the POUs, except for the unavoidable issues associated with sample contamination during collection and off-line testing. With this equivalence validated, the on-line and in-line readings will truly reflect the quality of those attributes in the water that is used.

However, if opportunities for non-equivalence exist, due to complex system designs (with sub or parallel loops, heat exchangers, etc.), and potentially TOC contributing hardware, then additional sampling points may be required.

2.7.2 Microbiological Attributes

Microbiological attributes of pharmaceutical water are not homogeneously distributed. Although microbiological quality is not a USP monograph requirement (but may be in other compendia), suggested action levels are furnished in USP <1231> [9] which reflect the original guidance established by the FDA for their inspectors in 1993 [1]. These microbiological quality levels are a regulatory expectation when these waters are used in pharmaceutical manufacturing with direct or indirect product contact.

This Document is licensed to
Lisa Oliveira-Ming
Taiwan
ID number: 1002915
2017-10-17 17:07:19 GMT+00:00

Microbial counts in the water being used from POUs could vary significantly in the distribution system, as planktonic or free floating microorganisms originate from biofilms and biofilms are localized in the piping or hardware between the water distribution system and the POU. This localized phenomenon can cause rapid on-line microbial testing, as well as conventional spot microbial testing from any system sampling port, to be an inaccurate representation of the microbial quality of the water that is being used for manufacturing.

Similar concerns exist with bacterial endotoxin, as it is produced by the Gram-negative microorganisms that can inhabit the water distribution system, the water purification system, and may be present in the feed water. Consequently, the results of any rapid on-line and at-line endotoxin testing or conventional endotoxin testing from any system sample port does not necessarily reflect the quality of the water that is being used for manufacturing.[6]

[6] **Note:** because of the extremely high level of microorganisms required to produce a significant change in the level of endotoxin and the special conditions needed to release that endotoxin into the water, it is uncommon for a well-designed and maintained system to exhibit varying endotoxin levels at different POUs.

For individual use only. © Copyright ISPE 2016. All rights reserved.

2.7.3 Grab Sampling versus On-Line and At-Line Monitoring

Because of the potential for localized, outlet specific contamination, grab samples for microbial and endotoxin testing have been unequivocally accepted from POUs as reflective of the quality of the water being used at the POU. However, manual sampling and conventional testing approaches can lead to days of delay in data availability and potential for artificially influenced good or bad data.

If rapid on-line or at-line technologies were installed for microbial and endotoxin testing at a single point in the distribution system (similar to conductivity and TOC) the resulting data may be valuable for process control purposes, but could not be used for product release purposes. POU testing is required for release. Alternatively, if microbial and endotoxin detection instruments were installed at all POUs, they may be compared with grab sample data and eventually validated for product release purposes. Portable instruments may represent another approach since they could be moved to different POUs, reducing the equipment costs.

2.7.4 Rapid Microbial Detection Techniques

It is not the purpose of this Guide to review the growing list of available rapid detection techniques for quantifying microbial levels in water. However, one way of discriminating the various approaches is to categorize them as being either destructive or non-destructive. In the destructive analyses, the microbial cell is killed by the analysis in the process of producing the signal of its presence. When a bacterial cell is killed, it can no longer be speciated, which is usually of great importance for quality control or release testing.

This analytical lethality is not important for process control purposes as the change in the microbial counts over time is the important variable. There are also times for quality control testing when this analytical lethality is unimportant, or when the finding of any microbial count triggers the execution of a conventional cultural plate count procedure using the same sample within a short time (for example, < 4 hours) of the original rapid test. In the non-destructive analyses, the microbial cells are not killed by the analysis, making their identification possible when the detected bacteria are allowed to develop into visible colonies by culturing.

Rapid microbial detection techniques can also be discriminated by whether or not there is a need to amplify the number of each of the original colony forming units (CFUs) so that a detectable signal can be elicited. Usually, this amplification process merely involves a relatively short incubation period, typically ¼ to ½ the full incubation time of a conventional cultivation approach. This allows several multiplications of the original CFU to occur. Other rapid microbial detection techniques not needing amplification to detect the original microbial cells are generally much quicker. Some of these techniques kill the cells and some do not. A few of these approaches have on-line instrumentation versions, but at the time of publication, most of these instruments are laboratory based.

In general, the various rapid microbiological methods still have some delay in data availability. The on-line technologies, though claiming to have instantaneous data availability, are actually a rolling summation of many hours of prior sampling caused by the limited side stream flow rate. The quickest techniques which can generate data, in perhaps 1 to 2 hours, usually involve destructive techniques. Many of the slower techniques are non-destructive, but take longer (1 to 3 days) for data availability. Current technologies do not give essentially instantaneous data akin to conductivity or TOC testing. Emerging technological advances have the potential to provide instantaneous microbiological data in the relatively near future.

This Document Licensed to
Taiwan,
ID Number: 1002915

2.7.5 Rapid Endotoxin Detection Techniques

The detection of the miniscule levels of endotoxin, which are considered toxic, in WFI can currently only be accomplished by the molecular amplification process involved with the bioassay employing Limulus Amebocyte Lysate (LAL) reagents. Analogs and chemical modifications of these reagents have allowed endotoxin to be quantitated photometrically in as little as 15 minutes. The LAL technology has traditionally been laboratory based, but has now been commercialized as a rapid portable version that can be easily employed at-line if needed. This technique is grab sample based with the associated limitations, but it is sufficiently rapid and performable with minimal training to make it a near real time at-line test, rivaling the test result turnaround time of some on-line TOC instruments.

For individual use only. © Copyright ISPE 2016. All rights reserved.

2.7.6 Future of Real Time Release for Pharmaceutical Water

The localized formation of biofilm between the distribution loop outlets and the POUs has consigned the definitive microbial testing of the water used by manufacturing to be from that POU where the water is delivered to a process or piece of equipment. Though the chemical water attributes are generally not different between a POU and an on-line instrument location, the microbial water attributes may be. From an on-line instrument perspective, and with the rapid advances occurring with instrumentation, real time release of the water for microbial attributes may become a more accepted practice in the relatively near future. For WFI systems where endotoxin levels are also an important attribute, the use of the portable at-line endotoxin test kit essentially adds endotoxin to the list of attributes that can be assured as passing in the finished water with an essentially real time test.

Other rapid microbial methods are available that could be used on grab samples from points of use. These tests are fairly rapid (currently about an hour) before test results are available. Some methods are destructive, some are non-destructive, but when the test results show zero counts, the test's destructive properties are considered irrelevant. When the test results show some counts and microbial identifications become important, only the longer duration rapid microbiological methods (1 to 3 days depending on medium) that allow microbial identification or conventional cultivation tests will suffice. A 1 to 3 day delay in result availability is not suitable for a parametric or real time release approach, but currently emerging technologies may make real time release a reality.

This Document is licensed to

Miss Olga Chung
Taiwan,
ID number: 1002915

Downloaded on: 6/7/22 3:22 AM

For individual use only. © Copyright ISPE 2016. All rights reserved.

3 Pharmaceutical Steam

3.1 Introduction to Pharmaceutical Steam

Types and uses of pharmaceutical steam:[7]

1. Plant steam
2. Chemical free steam
3. Process steam
4. Pure steam

The majority of discussion contained in this chapter will focus on pure steam, as pure steam is of the greatest concern in the pharmaceutical industry.

3.2 Generation and Distribution of Pharmaceutical Steam

Table 3.1 (Table 7.1 from *ISPE Baseline® Guide: Water and Steam Systems (Second Edition)* [7]) represents the typical industry and baseline practices for the production of pharmaceutical steam. They include the commonly accepted generation methods used to meet regulatory requirements in the pharmaceutical industry. The table is not intended to be definitive or all inclusive.

Table 3.1: Typical Industry and Baseline Practices for the Production of Pharmaceutical Steam

Intended Use of Steam	Method of Steam Generation or Steam Type
Parenteral and non-parenteral dosage form applications where steam is in direct contact with the drug.	Use of a Pure Steam Generator (PSG).
Critical step in the manufacture of API where steam is in direct contact with the API.	Use of a PSG.
Non-critical step in the manufacture of an API where added impurities will be removed in a subsequent step.	A PSG is commonly used; however, chemical-free steam may be acceptable.
Sanitization or sterilization of a high purity water system.	A PSG is commonly used; however; chemical-free steam may be acceptable, followed by adequate flushing.
Humidification for dosage form production where steam is in direct contact with the drug, where open processing occurs, or where chemical additives may be detrimental to the drug product.	Use of a PSG.
Humidification of non-critical HVAC systems, such as rooms and areas where the drug product is not directly exposed to the room atmosphere.	A PSG is commonly used; however; chemical free steam or plant steam may be acceptable.
Humidification of critical process cleanrooms.	Use of a PSG.
Heat source for non-critical and cGMP heat exchangers.	Chemical free steam or plant steam.
Deactivation of solid or liquid biologic process waste.	Use of PSG or chemical free steam in a dedicated deactivation vessel.
Sterilization of direct product contact production equipment, process vessels, containers, or packaged product.	Use of a PSG.

This Document is licensed to
Miss Olga Chung
Taiwan,
ID number: 1002915
Downloaded on: 6/7/22 3:22 AM

[7] Definitions are contained in the Glossary.

For individual use only. © Copyright ISPE 2016. All rights reserved.

Feed water requires proper pretreatment, as all generators are susceptible to scaling and corrosion. Pretreatment includes:

- Minimizing or preventing scale formation to minimize or prevent corrosion.
- Removal of objectionable volatiles, such as ammonia that are not removed by distillation/steam generating processes, and would carry over into the clean steam.
- Utilization of the facility's high purity water system (e.g., PW, WFI). (Note: steam generators may not require feed water to meet PW or WFI requirements.) This practice, however, ignores the ability of the pure steam generator to remove impurities.

Pure steam may also be referred to as clean steam, pyrogen free steam, water for injection (WFI) steam, or USP purified water (PW) steam. Regardless of the term used, when condensed, the steam condensate must meet requirements for USP/EP WFI. Pure steam is predominantly used for sterilization. Steam used for sterilization used in autoclaves for international manufacturing should also meet the requirements of British Standard (BS) EN 285:2015 [19] for non-condensable gases, degrees of superheat, and dryness:

- This steam is characterized as having no additives and limited generated superheat, except when the generated pressure is significantly higher than the use pressure of the steam.
- Condensate of steam must meet requirements for USP/EP WFI, have no buffer, and have a relatively low pH compared to that of plant steam.

For further information, see the *ISPE Baseline® Guide: Water and Steam Systems (Second Edition)* [7].

3.2.1 Regulatory Requirements

3.2.1.1 USP Monographs

Table 3.3 summarizes requirements from the USP monographs for the production of clean steam, which states that condensate from a clean steam system must meet USP WFI water quality requirements.

The USP monographs also state that dryness and non-condensable gas requirements should be determined by application. Table 3.4 includes some of the standards associated with pure steam and sterilization applications.

Table 3.2: USP Pure Steam Condensate Purity Requirements

USP Monograph Limits for Pure Steam		
Attribute	**USP Chapter**	**Notes**
Conductivity (µS/cm at 25°C (77°F)	<645>	1
TOC (mg/l)	<643>	2
Bacterial Endotoxins (EU/ml)	<85>	3
Notes: 1. Stage 1 limit of 1.3 µS/cm at 25°C (77°F), Stage 2 limit of 2.1 µS/cm at 25°C (77°F), Stage 3 measure pH and refer to monograph table 2. Instrument response (Rs-Rw) to 0.50 mg/l standard 3. < 0.25 EU/ml		

Miss Olga Chung
Taiwan,
ID number: 1002915
Downloaded on: 6/7/22 3:22 AM

For individual use only. © Copyright ISPE 2016. All rights reserved.

3.2.1.2 British Standard EN 285:2015 [19]

Additional pretreatment requirements may be necessary if the pure steam is to meet the requirement of British Standard (BS) EN 285:2015, specifically for non-condensable gases. Generators may need to be fitted with a feed water degassifier (also called a deaerator/decarbonator) or heated break tank (accomplished through the use of hot WFI). Hot WFI or PW, meeting Stage 1 conductivity requirements that has not been nitrogen blanketed, should have low enough levels of non-condensable gases to pass the BS EN 285:2015 test. The BS EN 285:2015 requirements for feed water and clean steam condensate are listed in the Table 3.3.

Table 3.3: Requirements for Feed Water and Clean Steam Condensate [19]

Determinant	Feed Water	Clean Steam Condensate
Residue on Evaporation	≤ 10 mg/l	N/A
Silicate (SiO_2)	≤ 1 mg/l	≤ 0.1 mg/l
Iron	≤ 0.2 mg/l	≤ 0.1 mg/l
Cadmium	≤ 0.005 mg/l	≤ 0.005 mg/l
Lead	≤ 0.05 mg/l	≤ 0.05 mg/l
Balance of heavy metals, except iron, cadmium, lead	≤ 0.1 mg/l	≤ 0.1 mg/l
Chloride (Cl)	≤ 2 mg/l	≤ 0.1 mg/l
Phosphate (P_2O_5)	≤ 0.5 mg/l	≤ 0.5 mg/l
Conductivity (at 25°C (77°F))	≤ 5 µS/cm	Passes Stage 3
pH value (degree of acidity)	5 to 7.5	5 to 7
Appearance	Colorless, clean without sediment	Colorless, clean without sediment
Hardness (∑ Ions of alkaline earth)	≤ 0.02 mmole/l	≤ 0.02 mmole/l
Note: compliance should be tested in accordance with acknowledged analytical methods.		

Table 3.3 suggested maximum contaminants in feed water supplied to a dedicated steam generator and suggested maximum contaminants in clean steam supplied to the sterilizer from BS EN 285:2015 Informative Annex [19].

Steam is produced in specially designed non-fired generators or from the first effect of multi effect WFI stills, which should not use scale or corrosion inhibitor additives. The feed water should be pretreated to remove elements that contribute to scaling or corrosion, and the materials of construction of the generators are resistant to corrosion by steam containing no corrosion inhibitors.

This document is licensed to
Miss Olga Chung
Taiwan,
ID number: 1002915

Downloaded on: 6/7/22 3:22 AM

For individual use only. © Copyright ISPE 2016. All rights reserved.

3.2.2 *Consensus Standards*

Table 3.4: Consensus Standards and Recommended Practice for Pure Steam

Consensus Standard or Guideline	Title	Specifications or Recommended Practice
ANSI/AAMI ST79 [20]	Comprehensive guide to steam sterilization and sterility assurance in health care facilities	This recommended practice covers steam sterilization in health care facilities.
ASME BPE-2014 [21]	Bioprocessing Equipment	Design recommendations for clean steam distribution systems.
BS EN 285:2015 [19]	Sterilization, Steam sterilizers, Large sterilizers	Specifies design requirements and tests for large steam sterilizers primarily used in health care or commercially.
HTM 2031 [22]	Clean Steam for Sterilization	Guideline for the quality of steam for sterilization.
ISO 13408-5:2006 [23]	Aseptic processing of health care products – Part 5: Sterilization in place	Specifies the general requirements for sterilization in place applied to product contact surfaces of the equipment used in manufacture of sterile health care products by aseptic processing and offers guidance on qualification, validation, operation and control.
PDA Technical Report 1 [24]	Validation of Moist Heat Sterilization Processes Cycle Design, Development, Qualification and Ongoing Control	Guidance of the development and validation of steam sterilization cycles in industrial applications.
ISO 17665-1:2006 [25]	Sterilization of Health Care Products -- Moist Heat -- Part 1: Requirements for the development, validation and routine control of a sterilization process for medical devices	Requirements for the use of moist heat in the sterilization process, including development, validation and routine control of the sterilization process.
ISO 11140-4:2007 [26]	Sterilization of Health Care Products -- Chemical Indicators -- Part 4: Class 2 indicators as an alternative to the Bowie and Dick type test for detection of steam penetration	Requirements for use of Class 2 indicators as an alternative to the Bowie and Dick type test for steam sterilizers.

This Document is Licensed to
Miss Olga Chung
Taiwan,
ID number: 1001912
Downloaded on: 6/7/22 3:22 AM

3.2.3 *Distribution Systems*

The distribution piping systems used for all grades of steam should follow good engineering practices. Pure steam distribution systems have additional requirements for contact materials due to the aggressive nature of pure steam. Corrosion resistant 316 or 316L grade stainless steel tubing or solid drawn pipe is typically utilized in new systems. However, legacy systems may be constructed of 304 and 304L grade stainless steel.

The surface finishes recommended for pure steam distribution systems are not as strict as for pure water distribution systems because of the high operating temperatures and self-sanitizing nature of pure steam. Pure steam distribution systems are generally subjected to risk analysis and may installed after consideration of the following guidelines:

For individual use only. © Copyright ISPE 2016. All rights reserved.

- Mill finish or mechanically polished pipe may be used, but typical mechanical polishes of 35 to 20Ra are utilized for clean steam generators and distribution systems.
- Internal surfaces, including orbital and mechanical welds may be passivated to improve corrosion resistance.
- Electropolishing of internal surfaces may be utilized but may not be necessary because of the high operating temperatures and an increase in the formation of rouge.

For further information, see *ISPE Baseline® Guide: Water and Steam Systems (Second Edition)*, Chapter 10 [7].

General design practices for pure steam distribution systems include:

- Allowance for thermal expansion and the ability for condensate to drain effectively.
- Sloping of piping between 1/8 inch/foot (10 mm/m) to 1/4 inch/foot (20 mm/m) as outlined in ASME BPE-2014 [21], but good engineering practices and risk analysis tools may be used to determine the appropriate slope.
- Sloping of piping in the direction of steam flow and to a low point condensate trap for adequate condensate removal.[8]

Figure 3.1: Isometric of Typical Clean Steam System
Reprinted from ASME BPE-2014 (Figure SD-4.2.2-1), by permission of The American Society of Mechanical Engineers. All rights reserved. www.asme.org.

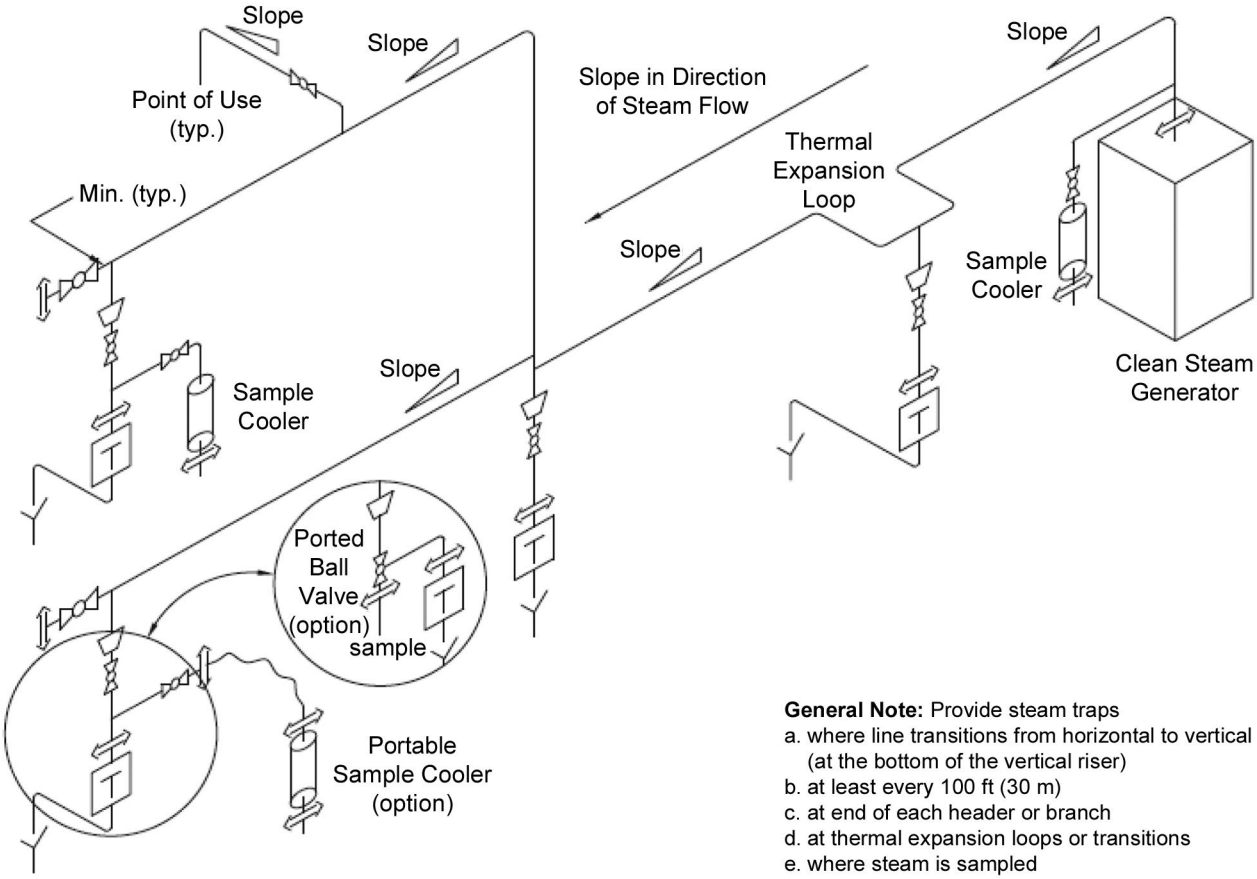

[8] Sloping of distribution piping in the direction opposite of flow is not recommended because condensate may be easily reintroduced into the pure steam.

For individual use only. © Copyright ISPE 2016. All rights reserved.

Figure 3.2: Clean Steam POU Design Guidance
Reprinted from ASME BPE-2014 (Figure SD-4.2.2-2), by permission of The American Society of Mechanical Engineers. All rights reserved. www.asme.org.

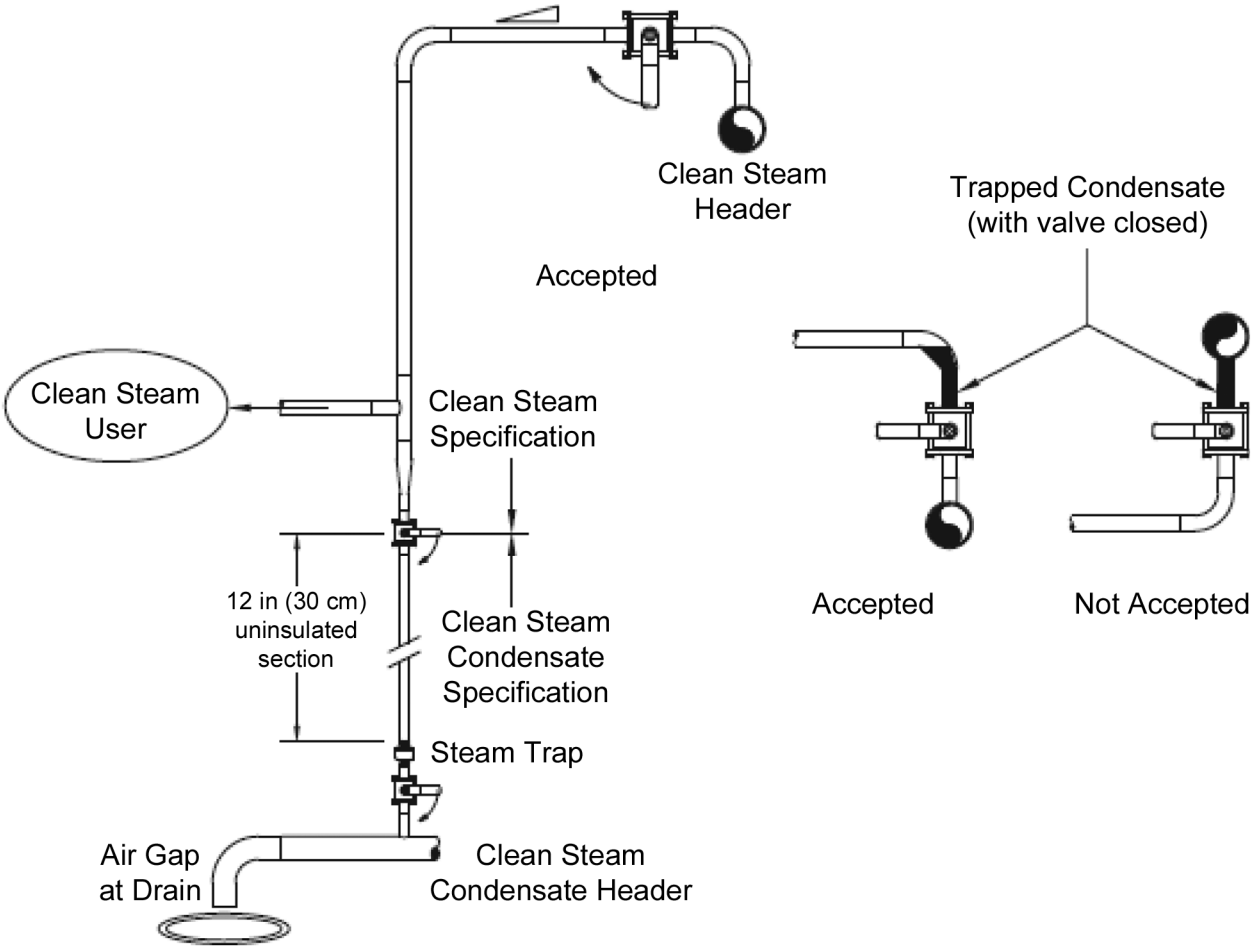

3.3 Sampling Locations

The product or facility requirements should be used to define the CQAs (e.g., dryness, chemical properties) for pure steam. Since different CQAs may require specific sampling equipment installed in multiple locations, several sampling locations may be required to effectively sample a pure steam system.

3.3.1 Critical Quality Attributes Define Sampling Locations

The level of non-condensable gases and dryness are two commonly defined CQAs and are defined in British Standards EN 285:2015 [19].

3.3.1.1 Non-condensable Gases

If non-condensable gas removal is required, these gases may be removed in the pretreatment to a pure steam generation system either by applying heat or using a degassifier because these gases pass directly through a pure steam generator and into the pure steam. A pretreatment degassifier is shown in Figure 3.3. Including a degassifier at the beginning of a pure steam distribution system may be considered. The degassifier can be as simple as a tee with the vent leg pointing upward and terminating with a balanced pressure air vent that opens to expel NCGs from the pure steam as shown in Figure 3.4.

Downloaded from www.ispe.org
Miss Olga Chang
Taiwan
ID number: 1002915
Downloaded on: 6/7/22 3:22 AM

For individual use only. © Copyright ISPE 2016. All rights reserved.

Figure 3.3: Using Heat to Remove Non-condensable Gases from the Pretreatment to a Pure Steam Generator
Courtesy of MECO, http://www.meco.com.

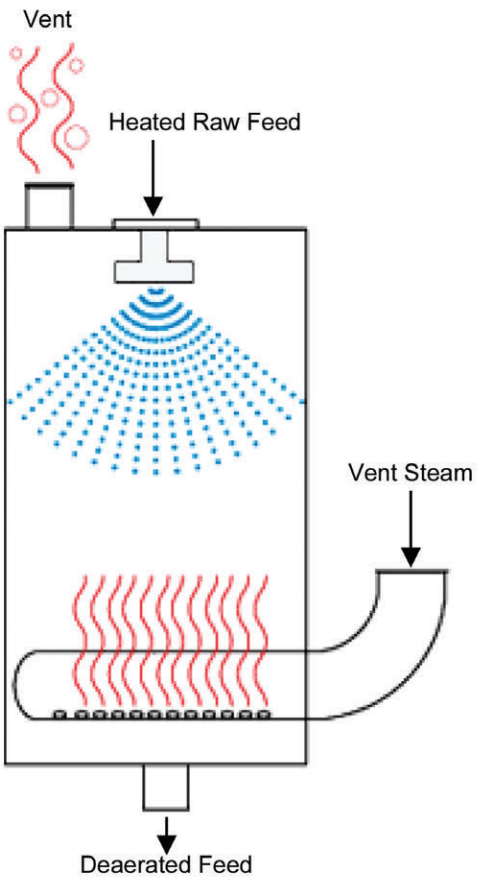

Figure 3.4: Installation of a Balanced Pressure Air Vent (V) at a High Point to Remove Non-condensable Gases from a Clean Steam Distribution System

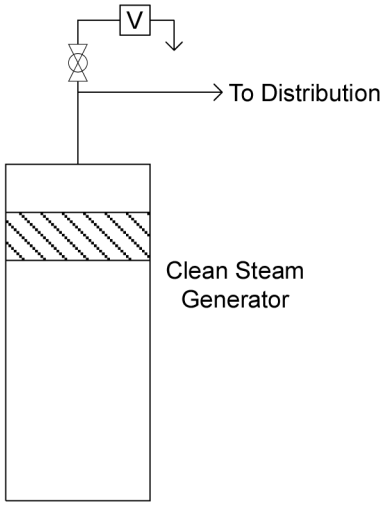

ument is licensed to
liss Olga Chung
Taiwan,
number: 1002915
ded on: 6/7/22 3:22 AM

Non-condensable gases should be sampled with a sample valve suitable for its intended purposes. Sampling for chemical and endotoxin purposes would use a different sample valve. Proper sampling for non-condensable gases is described in detail in BS EN 285:2015, Chapter 22.1 [19], and is shown in Figure 3.5.

For individual use only. © Copyright ISPE 2016. All rights reserved.

Figure 3.5: Schematic Diagram of Sampling Apparatus Used to Sample Pure Steam for Non-condensable Gases

Permission to reproduce extracts from British Standards (EN 285:2015, Figure 7) is granted by BSI.

British Standards can be obtained in PDF or hard copy formats from the BSI online shop: www.bsigroup.com/Shop or by contacting BSI Customer Services for hardcopies only: Tel: +44 (0)20 8996 9001, Email: cservices@bsigroup.com.

Dimensions in millimeters

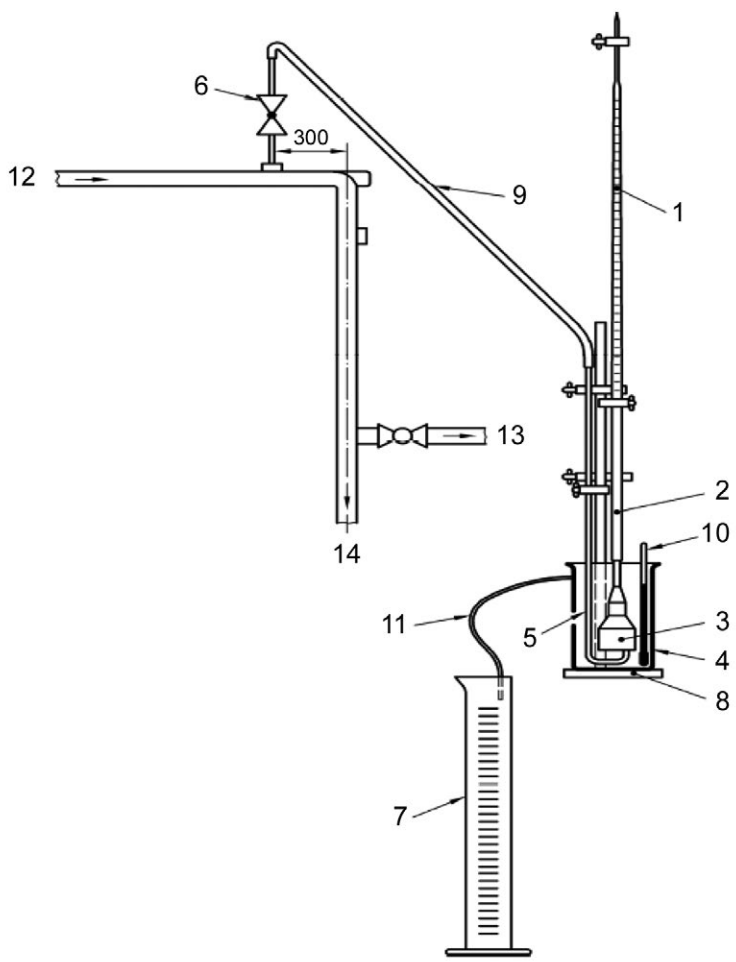

Key

1	50 ml burette
2,9	rubber tubing
3	funnel with parallel sides
4	2,000 ml container
5	steam sampling pipe
6	needle valve
7	250 ml measuring cylinder
8	burette stand
10	temperature measurement system
11	overflow pipe
12	from steam service
13	to sterilizer
14	to trap set

The calculation of the concentration of non-condensable gas as a percentage should be made using the equation:

$C_n = (V_b / V_c) * (100\%)$

Where:

C_n = concentration of non-condensable gases, in %

V_b = volume of water displaced from the burette, in ml

V_c = volume of water collected in the graduated cylinder, in ml

This Document is licensed to
Miss Olga Chung
Taiwan,
ID number: 1002915
Downloaded on: 6/7/22 3:22 AM

For individual use only. © Copyright ISPE 2016. All rights reserved.

3.3.1.2 Dryness

Dryness refers to the level of steam saturation and is the ratio of vapor mass to the mass of the steam mixture. Dryness is a dimensionless value, with a value of 1.0 being representative the ideal of dry saturated steam. Dry saturated steam may have excess heat introduced, which creates superheated steam. The amount of superheating should be minimized for efficient steam sterilization, since superheated steam is not saturated and will create uneven temperature distribution at the surface being sterilized. The dryness of the pure steam may be adversely impacted by the system design, with a few examples including:

- Incorrectly sloped lines
- Inadequately sloped lines
- Inadequate condensate removal (e.g., insufficient traps, incorrectly located traps)
- Insufficient pipe insulation resulting in excess condensation
- Incorrect POU design

The same location that is used for measuring non-condensable gases may be used for measuring the dryness of the steam. Dryness should be greater than 0.95 for metal loads and 0.90 for other loads according to BS EN 285:2015, Chapter 13.3.3 [19]. The method for measuring steam dryness is described in BS EN 285:2015, Chapter 22.2 [19], and is shown in Figures 3.6 and 3.7.

For dryness sampling, the sample should be taken from the center of the steam distribution pipe.

Note: this sample does not take into account the moisture present as a film on the pipe wall or the condensate on the bottom of the pipe. It is, therefore, not an accurate value, but represents only an approximation.

However, this sampling technique has become the most commonly used method, so changing to more exact sampling methods would lose the linkage between the established accepted values and the obtained values. As the industry continues to change and advance, parallels will surely be generated between the current industry accepted practices and more advanced sampling techniques as they are developed. This sampling technique can be said to represent a well-designed take off as this will also not include any of the condensate on the walls of the pipe.

Figure 3.6: Pitot Tube Design Used to Sample Steam for Dryness

Permission to reproduce extracts from British Standards (EN 285:2015, Figure 8) is granted by BSI.

British Standards can be obtained in PDF or hard copy formats from the BSI online shop: www.bsigroup.com/Shop or by contacting BSI Customer Services for hardcopies only: Tel: +44 (0)20 8996 9001, Email: cservices@bsigroup.com.

This Document is licensed to

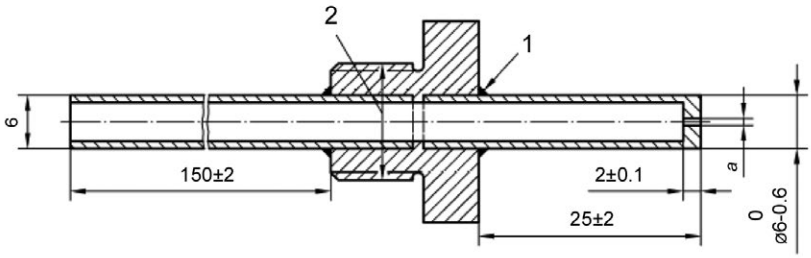

Dimensions in millimeters

Key
1 silver solder
2 pipe thread
EN ISO 228-G1/4 A

Note: The values given in the table are for guidance only. When the steam pressure is not within the ranges given, the bore 'a' size can be determined by extrapolation.

Steam Pressure kPa (bar)	Bore a mm ± 0.02
up to 300 (2)	0.8
up to 400 (3)	0.6
up to 700 (6)	0.4

For individual use only. © Copyright ISPE 2016. All rights reserved.

Figure 3.7: Sampling Apparatus for Dryness Measurements

Permission to reproduce extracts from British Standards (EN 285:2015, Figure 9) is granted by BSI.

British Standards can be obtained in PDF or hard copy formats from the BSI online shop: www.bsigroup.com/Shop or by contacting BSI Customer Services for hardcopies only: Tel: +44 (0)20 8996 9001, Email: cservices@bsigroup.com.

Dimensions in millimeters

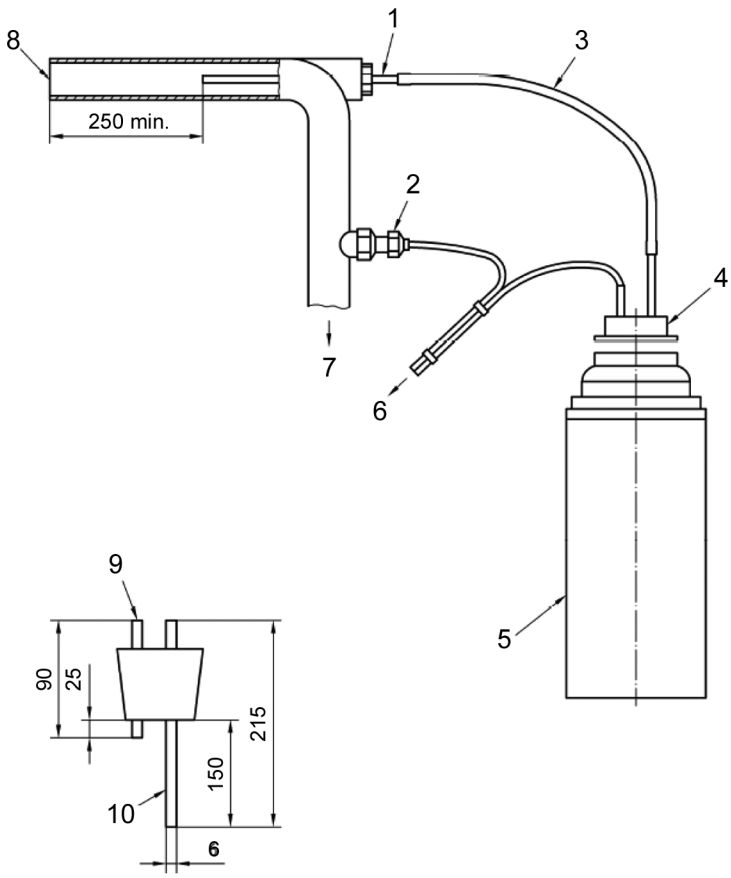

Key

1	pitot tube
2	temperature sensor entry gland
3	rubber tubing
4	rubber bung assembly
5	one-liter Dewar flask
6	to temperature measuring instrument
7	to sterilizer
8	from steam service
9	pipe for thermocouple and vent
10	sample pipe

The calculation of the dryness concentration is then made using the following equation [19]:

$$D = \frac{(T_2 - T_1)(C_{pw}(m_s - m_e) + A)}{L\,(m_f - m_s)} - \frac{(T_3 - T_2)C_{pw}}{L}$$

This Document is licensed to
Miss Olga Chung
Taiwan,
ID Number: 1002515
Downloaded on: 6/1/2023 3:22 AM

Where:

L = latent heat of dry saturated steam at temperature T3, in kilojoules per kilogram

m_e = mass of the Dewar flask and stopper, pipes and tube, in kilograms

m_s = mass of the Dewar flask, water charge stopper, pipes and tube, in kilograms

m_f = mass of the Dewar flask, water charge, condensate, stopper, pipes and tube, in kilograms

T_1 = initial temperature of the water in the Dewar flask, in degrees Celsius

T_2 = final temperature of the water and condensate in the Dewar flask, in degrees Celsius

T_3 = temperature of dry saturated steam delivered to the sterilizer, in degrees Celsius

C_{pw} = specific heat capacity of water (4.18 kJ/kg * K)

D = dryness value of the steam

A = effective heat capacity of the apparatus (0.24 kJ/K)

For individual use only. © Copyright ISPE 2016. All rights reserved.

3.3.1.3 Superheating

Superheating must be below 25°C (77°F) when the pure steam is expanded to atmospheric pressure according to BS EN 285:2015, Chapter 13.3.4 [19]. Samples should be taken from the center of the steam pipe in accordance with the test method of BS EN 285:2015, Chapter 22.3 [19], as shown in Figures 3.8 and 3.9.

Figure 3.8: Locating a Port for Sampling for Superheating

Permission to reproduce extracts from British Standards (EN 285:2015, Figure 10) is granted by BSI.

British Standards can be obtained in PDF or hard copy formats from the BSI online shop: www.bsigroup.com/Shop or by contacting BSI Customer Services for hardcopies only: Tel: +44 (0)20 8996 9001, Email: cservices@bsigroup.com.

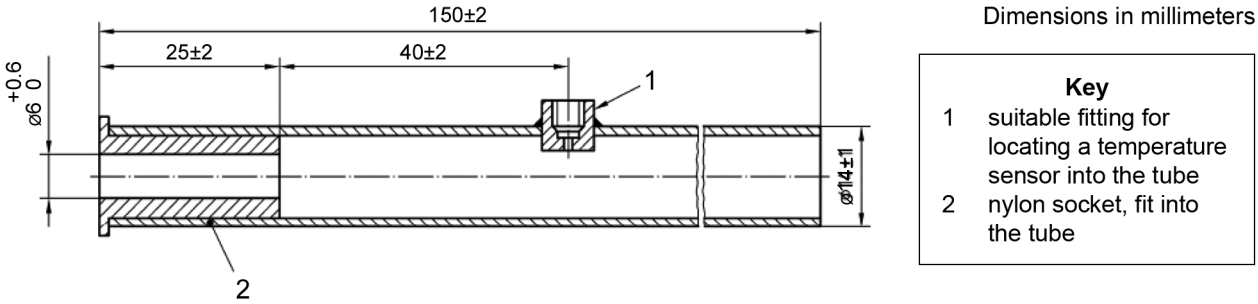

Figure 3.9: Sampling Apparatus for the Measurement of Superheating

Permission to reproduce extracts from British Standards (EN 285:2015, Figure 11) is granted by BSI.

British Standards can be obtained in PDF or hard copy formats from the BSI online shop: www.bsigroup.com/Shop or by contacting BSI Customer Services for hardcopies only: Tel: +44 (0)20 8996 9001, Email: cservices@bsigroup.com.

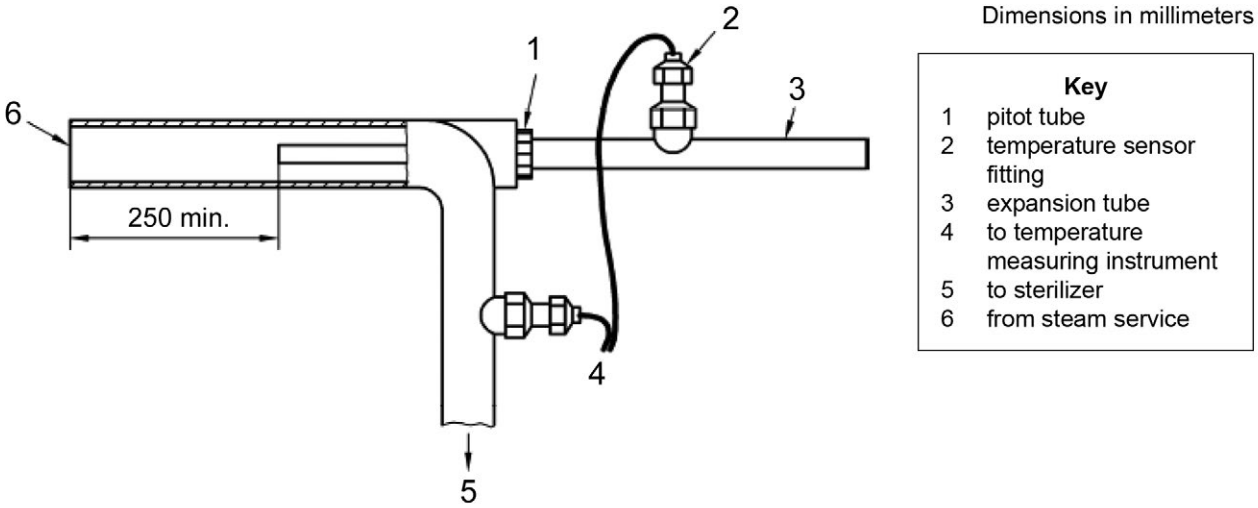

Miss Olga Chung
Taiwan,
ID number: 1002915
Downloaded on: 6/1/22 3:22 AM

The calculation is:

enthalpy at atmospheric pressure: 2673.8 kJ/kg

heat capacity of saturated steam: 2.029 kJ/kg/°K

maximum allowed superheating according to BS EN 285:2015 [19]: 25°K

superheat enthalpy: 2673.8 kJ/kg + (2.029 kJ/kg/°K) * (25°K) = 2724.53 kJ/kg

While we do not go into all the calculations here, saturated steam at 2 barG (~30 psi) has an enthalpy of 2723.2 kJ/kg, which is less than the superheat enthalpy calculated above. Therefore, if the pressure is below 2 barG and the dryness value is below 1.0, the steam cannot get superheated and will always pass the superheat requirement for pure steam.

For individual use only. © Copyright ISPE 2016. All rights reserved.

The formula for higher pressures (> 2 bar) is:

$D * H + (1 – D) * h < 2724.53$ kJ / kg

Where:

D = measured dryness
H = enthalpy of steam at measured steam pressure at POU
h = enthalpy of water at measured steam pressure at POU

Figure 3.10: Positioning of Sample Collection for Wetness and Superheating Test

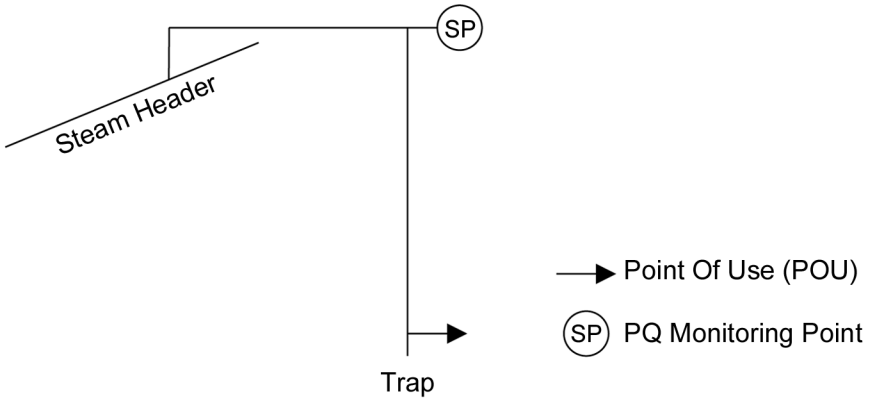

3.3.1.4 Conductivity, TOC, and Endotoxins

Condensate collected from pure steam sample points should comply with the specifications for WFI grade water. Such sample points should be placed at the outlet of the pure steam generator, at POUs, or as close to POUs as possible. There may be one sampling cooler at each sampling point, or coolers can be transported from sample point to sample point, depending on the design of the system. A simple method for sample collection for these purposes is to have a valve with a sanitary connection at each drainage point, allowing connection of a steam trap and condensate cooler without closing the system down. Design considerations for sample valves for these quality attributes is identical to those for water systems, which have been covered in Chapter 2 of this Guide.

This Document is licensed to

Miss Olga Chung
Taiwan,
ID number: 1002915

Downloaded on: 6/7/22 3:22 AM

For individual use only. © Copyright ISPE 2016. All rights reserved.

3.4 Sampling Plans (Frequency and Duration)

Pure steam is defined to be steam that does not contain any added substances and the condensate sampled from pure steam meets the requirements for USP [9]/EP [2] WFI water. In addition, pure steam that is used for sterilization applications of porous loads for international manufacturing also should meet the requirements of BS EN 285:2015 [19] for dryness, non-condensable gases, and superheat the USP states that:

> *"Pure Steam is prepared from suitably pretreated source water analogously to either the pretreatment used for Purified Water or Water for Injection".*

Pure steam that is used in aseptic applications, as well as applications where the steam or condensate directly contacts products, excipients, container closures, or equipment/components, should be appropriately sampled.

The recommended frequencies for sampling pure steam should be determined based on the state of the system such as:

- Restoration from scheduled/unscheduled shutdown
- Maintenance
- Validation
- Normal routine operation

The frequency of sampling can also be based upon the generation and distribution portions of the system. Physical, chemical, and biological elements (i.e., endotoxin) should be monitored for pure steam. There may be different sampling frequencies employed within these categories.

Risk analysis tools may be used to develop a sampling rationale that takes into account:

- The criticality of the POUs on the system
- The frequency of use of each POU
- The accessibility for sampling
- Historical performance

Figure 3.11 is a schematic representation of the typical components of a clean/pure steam system.

This Document is licensed to

Miss Olga Chung
Taiwan,
ID number: 1002915

Downloaded on: 6/7/22 3:22 AM

For individual use only. © Copyright ISPE 2016. All rights reserved.

Figure 3.11: Simple Clean Steam System Diagram

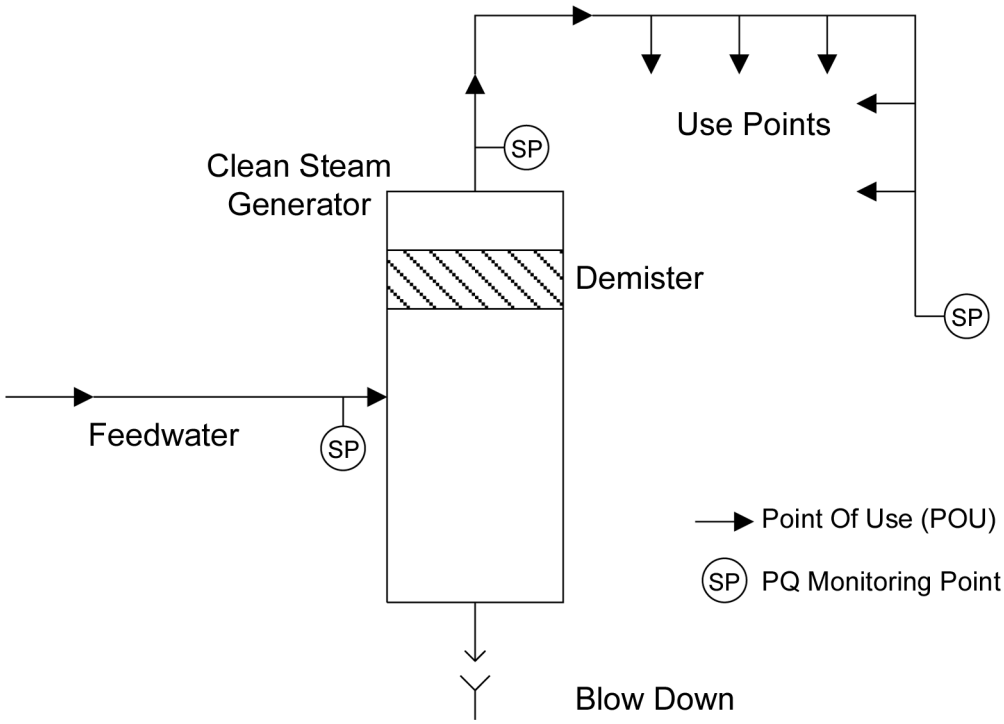

Note: in Figure 3.11 steam traps have not been shown for the purposes of clarity.

3.4.1 Commissioning and Qualification

Commissioning is defined in the *ISPE Good Practice Guide: Approaches to Commissioning and Qualification of Pharmaceutical Water and Steam Systems (Second Edition)* [13] as:

> *"a well-planned, documented, and managed engineering approach to the start-up and turnover of facilities, systems, and equipment to the end-user that results in a safe functional environment that meets established design requirements and stakeholder expectations".*

Qualification is intended to provide documented evidence with oversight by quality assurance personnel that a pure steam system will consistently produce the appropriate quality of steam to end users in accordance with regulatory expectations [13].

This Document is licensed to
Miss Olga Chung
Lawson,
11/16/2017 10:00 AM
Downloaded on: 6/7/22 3:22 AM

3.4.2 Commissioning

Sampling and monitoring of generation and distribution systems for pure steam systems during commissioning is considered GEP. Commissioning is where the intended operating parameters of the equipment are identified and tested. For further information on commissioning and qualification recommended practices see the *ISPE Good Practice Guide: Approaches to Commissioning and Qualification of Pharmaceutical Water and Steam Systems (Second Edition)* [13].

For individual use only. © Copyright ISPE 2016. All rights reserved.

Sampling and testing activities include chemical testing as appropriate for the unit operation with the maximum acceptable chemical levels of the condensate meeting the applicable WFI monograph requirements, e.g., EP [2], USP <1231> [9], and JP16 [11]. Typically, the duration of commissioning activities may vary depending upon the complexity and size of the system. Once the entire system is operating, each unit operation should be tested at least once during the commissioning phase. The total time needed for sampling during commissioning is determined by the time needed to complete all unit operation testing at least once during the commissioning phase. Depending upon the depth and breadth of the commissioning plan, the subsequent qualification may serve only as additional proof that the system will consistently deliver the required attributes of pure steam. The data collected as part of the commissioning sampling phase may be used to justify the sampling plan developed for qualification, if the acceptance criteria have been preapproved by an appropriate SME and/or quality assurance representative [13].

The commissioning plan should sufficiently be rigorous, to test and challenge the CPPs of the system. During this phase, if any changes are made to defined CPPs, the commissioning phase should be repeated. It is strongly recommended that any changes be identified during this phase, as changes identified and initiated during the initial and/or intermediary phases of qualification are more costly to implement.

3.4.2.1 Qualification

Qualification typically consists of three parts: IQ, OQ, and PQ. Since most sampling is done during the PQ, the following discussion will focus on PQ testing.

PQ is typically organized into three phases:

1. Initial sampling
2. Intermediary sampling
3. Extended sampling

Activities performed during commissioning may be leveraged if the work was suitably conducted and documentation is prepared according to prescribed site quality documentation practices.3

Initial Sampling

Initial sampling is intended to demonstrate that the system consistently operates within predetermined operating ranges and delivers pure steam of the required quality. Sampling points are typically located immediately after the pure steam generator, at POUs and at worst case locations, which are either the most distant from the pure steam generator or at the lowest points in the system. In addition, sampling and testing for the physical attributes (i.e., non-condensable gases, superheat, or dryness) should be performed while equipment (e.g., autoclaves) is operating. The initial sampling study should be performed for a minimum of three consecutive working days but may last for up to ten working days with samples being taken from each POU and at the outlet of the pure steam generation system.3

Pure steam should not be used for production purposes during the initial sampling phase. The formal provisional release of the pure steam system should be performed by quality management after the review and assessment of all available results obtained during the initial sampling phase and the preparation of a summary report from this phase.

In the case of larger systems with multiple branches, sampling at the ends of each individual pipe branch should be taken into consideration as shown in Figure 3.12.

Not Purchased or Downloaded by
Miss Olga Chung
Taiwan
ID number: 1002915
Downloaded on: 6/7/22 3:22 AM

For individual use only. © Copyright ISPE 2016. All rights reserved.

Figure 3.12: Complex Clean Steam System Diagram

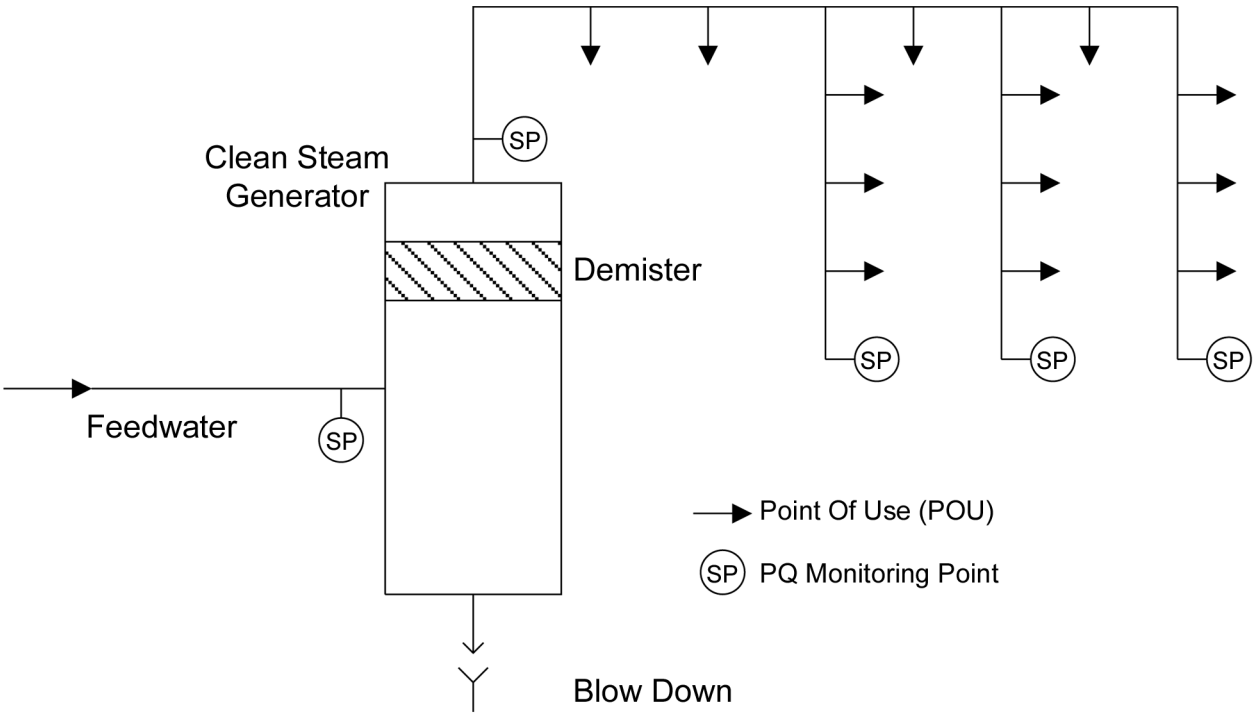

Note: in Figure 3.12 steam traps have not been shown for the purpose of clarity.

Intermediary Sampling

Intermediary sampling is intended to demonstrate that a system consistently operates within predetermined operating ranges and delivers pure steam of the required quality. Intermediary sampling or system consistency/stability activities typically last for the same duration as the initial sampling phase and occur immediately following completion of the initial sampling phase.

The sampling and testing frequency are nearly identical to the activities in initial sampling phase except that the outlet of the PSG need not be sampled daily, but the frequency may be reduced. One suitable approach would be to sample once at the start of the intermediary phase and again at the end of the intermediary phase.

An assessment approved and documented by quality management, should also be available at the end of the intermediary sampling phase, which allows an uninterrupted progression into the extended phase of sampling.

Pure steam produced during the intermediary phase may be provisionally released for manufacturing use, provided that the initial phase was assessed and documented by quality management to be successful and the system has been authorized for use.

Summary Interim Report

A summary interim report should be prepared following both the initial and intermediary sampling phases. The report should be based on all data gathered during these phases and provides the conclusion on the acceptability (or otherwise) of the system for routine production use during the extended phase of sampling. The summary interim report following the initial phase would be used to justify the provisional release of the system for manufacturing use. The summary interim report following the intermediate phase would be used to justify the full release of the system for manufacturing purposes.

This Document is licensed to
Miss Olga Chang
Taiwan,
ID number: 1002915
(c) 2016 ISPE

For individual use only. © Copyright ISPE 2016. All rights reserved.

Extended Sampling

Extended sampling is designed to demonstrate that the pure steam system, when operated over a longer period of time (typically for the balance of the year), will consistently produce pure steam of the required quality. The PQ of the pure steam system is considered completed when performance data for a full year (inclusive of all sampling phases) are obtained. The extended sampling plan further reduces sampling frequencies for the balance of the year, with the outlet of the pure steam generator being sampled on a weekly basis and other locations sampled on a rotating basis such that each location is sampled every two weeks.

A report should be created documenting the overall qualification process (all phases) including a clear conclusion statement on whether the system was successfully qualified. The report should be reviewed and authorized by the relevant functions involved, including quality management.

3.4.3 Ongoing Routine Monitoring Program

Following successful qualification of the pure steam system, routine ongoing monitoring should involve sampling and testing at a frequency and for the critical quality attributes that are supported by a documented risk analysis process. Some considerations may involve local or other regulatory compliance requirements as well as:

- The use of the system, including processes where the steam is used (e.g., autoclaves)
- The design and implementation of POUs (e.g., frequency of port use, cool points, dead legs, line slopes, types of valves, location of the port in the loop or on the line)
- The material of construction of piping
- The sampling technique and sample container utilized
- The design of feed water and steam distribution systems, including, but not limited to: age of system, system use, feed water quality, proper steam trap placement, etc.
- Routine maintenance (e.g., rouge inspections, passivation)
- Qualification results

The physical clean steam quality attributes (i.e., dryness, non-condensable gas limits, maximum superheat) should be monitored at established, regular intervals, but the frequencies may be different from the sampling and testing of the chemical and biological aspects of the steam condensate.

This Document is licensed to

The quality attributes (i.e., TOC, conductivity and bacterial endotoxins) should be measured in the pure steam condensate and tested according to WFI specifications. The items “Appearance” and “Nitrates” should be included in the testing schedule to assure compliance with the European Pharmacopoeia. Testing for total aerobic count for pure steam condensate is not necessary due to the lethal properties of steam.

Hsu Mei Chen
Taiwan,
Downloaded on 6/7/23 3:23:14 AM

Routine monitoring frequencies should be set up after a thorough evaluation of the results obtained during the three phases of the qualification process. Depending upon the results, routine sampling schedules may vary significantly from those applied during the extended sampling phase (e.g., if data obtained during qualification shows that the system is in a state of control). However, if occasional adverse results occur (e.g., exceeding Alert and Action Levels, adverse trends), measures should be taken (e.g., system redesign and modification) to improve the situation, such as the detection and elimination of cold spots and/or areas where condensate can accumulate.

An example of an Ongoing Sampling Plan appears in Table 3.5.

For individual use only. © Copyright ISPE 2016. All rights reserved.

Table 3.5: Ongoing Monitoring Program Example

Pure Steam	Weekly	Endotoxin, nitrates, TOC, conductivity	Generator
	Monthly	Endotoxin, nitrates, TOC, conductivity	One-way distribution most distant points
	Biannually	Endotoxin, nitrates, TOC, conductivity	All use points
	Annually	Steam quality (non-condensable gas, superheat, dryness)	Autoclave use points

Trending of data should be performed at regular intervals to detect any adverse trends, with intervals set depending upon the pure steam system's quality and performance (e.g., ongoing, quarterly, semi-annually or annually). Testing frequencies may change based on the trending results obtained and authorized by appropriate change control functions.

3.4.4 System Shutdown

Following a shutdown for an extended period as defined by SOPs, samples for chemical and biological (i.e., endotoxin) properties should be collected from the generator and all use points and tested before system use and prior to resumption of use for routine activities.

3.5 Sample Valve Design

This is covered in Section 2.4 of this Guide.

3.6 Pure Steam Sampling Techniques

3.6.1 Obtaining Representative Samples

The goal of the sampling program is to obtain samples that accurately reflect the contents of the steam system. When sampling a liquid, contaminant distribution should be accounted for as part of the sample evaluation.

Pure steam cannot be evaluated in its vapor state; therefore, pure steam needs to be condensed in order to be evaluated. Based on compendial requirements (USP, EP, JP, etc.), condensed pure steam should be evaluated using the same criteria used to evaluate WFI. The techniques used are similar to those for water; however, there are two issues that can affect pure steam condensate sampling:

This Document is licensed to
Miss Olga Chung
Taiwan,
ID number: 1002915
Downloaded on: 8/17/2022 AM

1. The equipment used to condense the pure steam and collect samples

2. The final temperature of the condensate

3.6.1.1 Equipment Considerations

When condensing pure steam for sampling, the equipment should not contribute contaminants to the sample. The equipment should be designed to allow for complete cleaning and drainage. It should also be possible to sterilize the equipment and for it to be depyrogenated to ensure that no endotoxins are added to the sample. In addition, the equipment typically requires a cooling source (such as chilled water) to facilitate condensation. The amount of chilled water required may be significant, necessitating larger than expected equipment sizes and/or cooling media flow rates, because of the significant amount of latent heat that needs to be removed to condense the pure steam. Calculations should be performed to determine the exact requirement.

For individual use only. © Copyright ISPE 2016. All rights reserved.

Sampling heat exchangers can be sterilized in place, using the pure steam from the system. This can help to simplify the sampling process, but may result in a larger cooling load, as the mass of the sampling heat exchanger needs to be raised to the necessary temperature for sterilization, as a minimum. This methodology can result in an extended sampling duration requirement, possibly for each sample obtained.

Heat exchangers used for pure steam condensation and subsequent sampling may need to meet the requirements of heat exchangers used for WFI sampling in order to mitigate the risk of undetectable cooling water contamination of the condensate sample. Requirements may include double tube sheet design and routine maintenance to ensure that cooling water contamination does not occur. The size of this equipment will depend on the:

1. Pure steam pressure (and resulting temperature)

2. Sample temperature desired (“delta T”)

3. Temperature and flow of cooling media available

If hoses or other components are employed during the sampling process, they should be suitably cleaned and dried when not in use, sterilized and possibly depyrogenated to prevent sample contamination.

It is important to predetermine the type of equipment that will be required based on the application. A source of cooling media is required near each sample point unless a portable, packaged, closed loop chiller is used. For fixed applications, permanently piped coolant supply and return lines are required, unless once through cooling (requiring suitable drains) is selected. In addition, a suitable drain or receptacle should be available for flushing.

Once there is sufficient condensate flowing, samples can be collected. Again, any flush time interval required should be qualified. The sampler should take the sample immediately; this need not be established based on the equipment used to condense the steam to get the best sample.

Note: bioburden is not required of steam sampling per the USP/NF. However, establishing that the pure steam line has no thermophilic bioburden should be an evaluation done prior to or during the PQ. Vegetative bacteria will not be present in condensed pure steam unless they are outgrowths of spores, from inadequately designed or failed steam traps which prevent condensate removal, from poorly prepared condensers, or from poor sample collection and handling.

Packaged Sampling Systems for Steam Collection

Packaged sampling systems are commercially available for both fixed and portable applications. Additionally, individual components may be purchased for assembly in the field as needed. Figure 3.13 shows an example of such a kit.

Figure 3.13: Steam Quality Sampling Kit Example
Used with permission from Carltex Inc., http://www.carltex.com/.

This Document is licensed to
iss Olga Chung
Taiwan,
number: 1002915
led on: 6/7/22 3:22 AM

For individual use only. © Copyright ISPE 2016. All rights reserved.

Sample Containers

When taking samples, efforts should be made to ensure that sampling containers do not introduce measurable contaminants. This may necessitate using several types of sample containers to sample a given POU. The temperature of the condensate sample should be considered if a material other than glass is utilized.

Steam collection kits that support collection of samples to be tested under BS EN 285:2015 [19] are commercially available for purchase. Any collection containers procured from a supply company not selling certified kits should conform to the requirements in BS EN 285:2015 [19]. Metal parts on apparatus must be constructed of sanitary grade stainless steel and passivated. Non-metal apparatus should be glass or HDPE or heat resistant plastic material with smooth surfaces. Measuring apparatus should be certified as clean and suitable for use accordance with ASTM apparatus standards.

There should be a plentiful supply of prepared sterilized bioburden sampling containers and appropriate clean chemical collection containers.

If containers are reused, they should be carefully washed and rinsed, with a final distilled or deionized water rinse prior to sterilization. Plastic containers will require steam sterilization in a validated cycle. Glass containers can be sterilized by steam or dry heat, depending on the container closure. That cycle must also be properly validated.

Types of Samples and Containers

For most high purity and pure steam samples, three to four groups of samples are taken:

1. TOC

TOC samples should be taken in TOC collection vials, which are made of glass, as plastic containers can introduce TOC to the sample results. A TOC vial sample rack should be used that securely holds the unused and filled TOC vials. This can help to prevent accidental breakage during collection and handling.

The TOC vials typically hold a 40 ml sample and should be filled completely before the closure is applied.

2. Conductivity and pH

Typically, glass (borosilicate), sterile polypropylene plastic, or inert fluoropolymer containers are the most common container material for collecting condensed steam samples. Glass containers may introduce trace residues to the sample that will change both the conductivity and pH of the collected sample. Plastics tend to avoid the ionic leachables, but most are somewhat permeable to atmospheric CO_2, which will alter the conductivity of the sample. Container leaching should be evaluated prior to implementation, but the best practice would be to test the samples as quickly as possible after sampling. Typically, containers should be able to hold at least 300 ml of sample, to allow for Conductivity Stage 1, Stage 2, and Stage 3 testing.

3. Bioburden

Bioburden samples should be taken in sterile containers, typically an inert plastic such as polypropylene or a suitable fluoropolymer. Typically, high purity water testing includes a total plate count. Some companies also include a coliform count, although sampling for coliform is not needed in most systems.

4. Endotoxin

Endotoxin sampling should be done using pyrogen free containers of either glass or inert plastic. If considering plastic, the type of plastic container is important to minimize the potential for endotoxin adsorption issues that could result in false negative results. Sampling for endotoxin testing requires collecting approximately 10 to 20 ml in sterile pyrogen free containers.

This Document is Licensed to
Miss Olga Chung
Taiwan,
Downloaded on: 6/7/22 3:22 AM

For individual use only. © Copyright ISPE 2016. All rights reserved.

3.6.1.2 Final Temperature of the Condensate

The condensate temperature for steam sampling should be < 50°C (122°F) and preferably near ambient temperature. It is preferable that a temperature gauge be installed near the condensate line, if not one cannot be located at the condensate inlet on the condensing equipment.

It is recommended that sample conditioning condensers, coolers, and associated fittings and valves be constructed of 316 stainless steel and passivated.

Any special sampling equipment required that can make steam contact during collection (e.g., POU gaskets, sanitary fittings, hose barbs, steam condensing equipment) should be pyrogen free or must have been depyrogenated.

3.6.2 Training Sample Collectors

Operators should be properly trained and should have demonstrated their ability to collect samples following the approved sample collection SOP. There should be a particular emphasis on safety training when sampling pure steam, its condensate, or other hot liquid. Pressurized pure steam, often at pressures of 30 to 45 psig (135°C to 145°C (~275°F to 293°F)) and its condensed water (at temperatures near 82°C (180ºF)) can cause severe burns and potentially death.

During their training samplers should have observed a trained sampler who demonstrates the collection procedure for each type of collection, as well as the proper handling of each type of collected sample prior to hand off to the testing function. When collecting samples during training, there should be a duplicate set of samples taken by the trainer. The test results from the new trainee should be within a predefined acceptance level to those of the trainer as defined in the appropriate standard operating procedures. Any major discrepancies in trainee's test samples (physical or visual) may require additional resampling and should be noted and discussed with the trainee, including the possibility of a requirement for retraining.

Based on industry accepted best practice, trainees may be required to demonstrate that they can collect a minimum of three distinct sets of samples, one set per day for each type of collection and each unique location from which they will be required to collect samples.

Trainees should not be allowed to conduct unobserved sampling and handling until the trainer is satisfied that they can sample and collect to an appropriate standard, without impacting the water sample test results.

3.6.3 Preparation for Sample Collection

Materials should be prepared before beginning the actual sampling process. An inventory of containers/equipment should be maintained, to avoid delays for lack of materials. In some cases, preparation should be made the day before sampling.

This Document is licensed to
Miss Olga Chung
Taiwan,
ID number: 1002915
Downloaded on: 6/7/22 3:22 AM

Examples of typical items that may be staged for use include, but are not limited to:

- Rolling railed cart, stainless or cleanable plastic
- Portable handle container
- Plastic/wire baskets and TOC racks
- Sample containers
- Labels, writing instruments, e.g., waterproof markers and indelible ink pens
- Laminated sampling plan

For individual use only. © Copyright ISPE 2016. All rights reserved.

It is important that the pure steam collection and testing SOP is reviewed carefully prior to sampling. This can help to ensure that final test results are valid within the limits of the analysis. The sampler should be aware of the types of sample collection containers. All collection containers should be capable of being sealed to prevent leakage or contamination of the sample.

3.6.3.1 Sample Point Preparation

Sample point preparation for sampling pure steam may or may not include flushing, spraying, disinfecting, or other treatments, based on the temperature, and assuming proper design. However, if particulate contamination from the local environment may be a problem, physical cleaning (i.e., wiping) of the sample outlet may be indicated, taking into account the temperature of the sampling point.

3.6.3.2 Use of Common Sampling Points for Process Control and Quality Control

Sampling for quality control purposes should reflect how the pure steam is used in production. In some cases, a single sample point in a piping system may be used for both purposes.

3.6.3.3 Multiple Sample Points

If a heat exchanger is dedicated to a specific POU for pure steam sampling and is permanently installed minimum setup will be required for each sampling event allowing utility connections and sanitary piping to be permanently installed and making sample taking fairly routine.

However, some heat exchanger units are mounted on portable carts either alone or with on board chillers, piping and controls. Portable units minimize capital outlay but often require special provisions at each sample location for connection of the portable unit to utilities and sanitary piping. In addition, there is an associated challenge of sanitizing the portable system between samples, although in some cases steaming at each subsequent sample location may be suitable for ensuring cleanliness and sterility.

3.6.3.4 Duplicate Samples

An important but often times overlooked part of any quality control program is to perform a predetermined percentage of all analytical tests in duplicate for a period of time to confirm the validity of established procedures, reagents and techniques.

When duplicate samples are taken, at least double the normal test volume should be collected.

Duplicate samples should be taken from the same sample location, but in two separate sample containers. Both containers should be labeled with the same sample identification, but can be distinguished by adding “-1” and “-2” after the sample number on the two containers.

This Document is licensed to
Miss Olga Chung
Taiwan,
10-Nov-2016
Downloaded on 6/7/23 3:23 AM

3.6.3.5 Blanks

A blank containing no sample should be submitted to the laboratory for each type of container used during sampling. The blank collection container should be from the same lot as the collection container used for that date. All precautions observed in the preparation of containers for sampling shall also be observed for containers used in the preparation of analytical blanks.

Variability in the blank can call the accuracy of any analysis into question. In the event of unusual test results, the laboratory can use a qualified high purity water sample to analyze any issues in the blank as part of an investigation.

For individual use only. © Copyright ISPE 2016. All rights reserved.

3.6.4 Sampling Procedures

3.6.4.1 General Considerations

For routine operation of critical systems that have completed PQs, there should be detailed sampling procedures approved for use. The departments responsible for sample collection and handling should have procedures detailing how to collect, label and handle the collected samples. It may not be necessary to have individual procedures for each sample point and one sampling and collection procedure may be used cover all samples, collections, and assays. Since additional apparatus may be required for sampling of pure steam quality attributes, it is a good practice to keep pure steam sampling procedures separated from those used to collect pure water samples.

When systems are new and undergoing PQ or have been modified and as part of a requalification PQ with a new sampling plan, it is acceptable to use the draft procedures.

Care should be taken to protect the sampler from scalding. Proper heat resistant gloves should be present in the collection kit and worn to protect the sampler from accidental burning.

If the POU is located in a dirty area, clean the sample port with 3% hydrogen peroxide or 70% sterile IPA prior to flushing the sample point. The cleaning procedure must be qualified prior to routine use and must account for the fact that the use of sterile IPA will impact TOC results.

Samplers should practice the good hand hygiene and health practices expected to be followed in any GMP facility. Appropriate GMP gowning for the area should be worn. Bouffant caps and beard covers should be used to prevent the sampler's hair from contaminating the sample during collection.

Samplers should wear powder free gloves before taking samples or handling sample containers.

Samplers should open the sample valve and flush the POU by running steam/condensed water to waste for the qualified flush time interval. This will allow for adequate flushing of the pipe between the sampling point and the condensing equipment. Sampling procedures may vary based on sample valve location, valve design, and the attribute being sampled. Sample valves should be of a sanitary design although laboratory points may not need to be as hygienically designed as those supplying pure steam to manufacturing.

Heat exchangers and sampling components should be suitably cleaned and/or sterilized. If reusable sample containers are utilized, cleaning procedures should be qualified prior to sampling.

When sampling for process control purposes, sampling should be performed in accordance with established procedures which should define flush times, hold times, and other variables.

This Document is licensed to

When sampling for quality control purposes, sampling should replicate the way that the steam is used for manufacturing. Converting steam to liquid at higher flow rates may be required and the sizing of cooling equipment and media should be adjusted accordingly.

Miss Olga Chung
Taiwan,
ID number: 1002915

3.6.4.2 Sample Labeling

Samplers should label all sample containers with:

Downloaded on: 6/7/22 3:22 AM

1. Sample identification:
    a. POU (include system ID and building, if required)
2. Type of sample (e.g., condensed steam) and indicate if a duplicate sample
3. Date and time of sampling

For individual use only. © Copyright ISPE 2016. All rights reserved.

4. Analysis required

5. Sampler's name

3.6.4.3 Sampling Procedure for TOC, Conductivity/pH, Bacteria, and Endotoxin

1. Samplers should flush the POU for the qualified flush time interval and at the qualified flush flow rate.

2. Samplers should wear clean powder free gloves.

3. Samplers should remove and set aside the sample container closure, and then manually open the valve on the condenser.

4. To prevent the sample from becoming contaminated, samplers should use caution to not let anything, except the sample, touch the inside of the container or the inside of the closure.

5. Samplers should fill each container completely, except for conductivity/pH samples where approximately 1 inch of air space should be left at the top to allow for adequate agitation prior to analysis.

6. Samplers should securely close the sample containers to prevent leakage or contamination.

If there is any question whether a sample has become contaminated, it should be discarded and a new sample taken.

3.6.4.4 Non-condensable Gases

Figure 3.5 shows sampling while running a steam sterilization cycle on a large steam sterilizer. It is recommended that a sequence of tests should be performed to determine the variability in the level of non-condensable gases.

1. Fill the 2 l container and burette with cold, deaerated water. Invert the burette with great care to ensure no air is trapped in the burette.

2. Remove the steam sampling pipe from the 2 l container and open the needle valve to purge all air from the pipe. Return sampling pipe to container, allowing it to bubble into the funnel. Add deaerated water to the 2 l container until water flows out through the overflow pipe.

3. Place the graduated cylinder to collect overflow. Adjust the needle valve to allow a continuous flow of steam into the funnel, ensuring that the steam enters the funnel in a way that any non-condensable gases will be collected in the burette.

4. Close the sampling valve.

5. Start the sterilization cycle and when steam is flowing to the sterilizer, open the sampling valve, allowing a continuous sample of steam into the funnel at a rate sufficient to cause a small amount of steam hammer.

6. Allow the steam sample to condense in the funnel. Any non-condensable gases will collect in the top of the burette. Collect the overflow in the graduated cylinder and observe the temperature of the water in the 2 l container. When the temperature in the container is between 70°C to 75°C (158°F to 167°F), close the needle valve.

7. Record the volume of water displaced in the burette and the volume of water collected in the graduated cylinder.

This Document is licensed to
Taiwan,
Downloaded on: 6/7/22 3:22 AM

For individual use only. © Copyright ISPE 2016. All rights reserved.

8. Calculate the concentration of non-condensable gases using the following equation:

C_n (percent) = $(V_b / V_c) \times 100$

Where:

C_n = the concentration of non-condensable gases, in percent
V_b = the volume of non-water displaced from the burette, in ml
V_c = the volume of water collected in the graduated cylinder, in ml

The percentage of non-condensable gases should be equal to or less than 3.5% (V/V).

3.6.4.5 Dryness

Steam should be tested for, and should pass the non-condensable gases test, prior to being tested for dryness. Refer to Figure 3.6 and 3.7 and understand that this test assumes the use of a large steam sterilizer operating in the textile cycle.

1. Assemble the apparatus as shown in Figure 3.7.

2. Weigh the assembled Dewar flask and record the mass as Me.

3. After several sterilization cycles, select the textile cycle with a temperature of 134°C (273°F).

4. Remove the stopper assembly and place 650 ml of water into the Dewar flask, with the water at a temperature at or below 27°C (81°F). Weigh the new assembly and record the mass as Ms.

5. Place a standard test pack (details in BS EN 285:2015 [19]) in the sterilizer.

6. Introduce a temperature sensor into the Dewar flask and note the temperature of the fluid in the flask, record this value as T1.

7. When the sterilizer steam valve first opens, attach the rubber tube (3) to the pitot tube (1) ensuring free drainage of condensate into the Dewar flask. Record the steam temperature as T3.

8. When the water in the Dewar flask reaches approximately 80°C (176°F), disconnect the rubber tube, agitate the flask to thoroughly mix the contents and record the temperature as T2.

9. Weigh the Dewar flask again, record this mass as Mf.

This Document is licensed to
Miss Olga Chung
Taiwan,
ID number: 1002915
Downloaded on: 6/7/22 3:22 AM

Dryness is calculated using the recorded values according to the following equation:

Dryness (D) = $((T_2 - T_1)*(C_{pw}*(M_s - M_e) + A))/L*(M_f - M_s) - ((T_3 - T_2)*C_{pw})/L$

Where:

L = the latent heat of saturated steam at temperature T3, in kilojoules per kilogram
C_{pw} = the specific heat capacity of water (4.18 kioljoules/kilogram/°K)
A = the effective heat capacity of the apparatus (0.24 kilojoules/°K)

The dryness should be 0.95 or above for metal loads and 0.90 for other types of loads.

For individual use only. © Copyright ISPE 2016. All rights reserved.

3.6.4.6 Superheat

Refer to Figures 3.8 and 3.9.

1. Assemble the apparatus as indicated in Figures 3.8 and 3.9.

2. Run a sterilization cycle with an empty chamber.

3. At the completion of this cycle, immediately place a full textile load and run another sterilization cycle. At the completion of the sterilization cycle, check the temperature recordings and confirm that the temperature did not differ by more than 3°C (37°F) from that measured in the steam pipe during the dryness test.

3.7 Sample Handling

Clear instructions should be provided to personnel collecting and handling pure steam condensate samples. A sample holding time limit should be established prior to the PQ to confirm the maximum time between collection and testing.

Samples should be transferred to the laboratory and placed on test within an hour of collection, to help increase the accuracy of the test results. If multiple samples are being collected and the collection process takes longer than an hour, the collector should divide up the sampling process, deliver samples to the testing laboratory, and then return to sampling.

Refrigerating samples will help to inhibit microbial growth, but gas absorption may create inaccurate test results.

3.8 Other Factors Influencing Sampling Strategies

Sampling strategies may be influenced by other factors such as:

- Geographic location of the plant
- Incoming water quality
- Pretreatment equipment
- PSG design

Each of these factors should be carefully evaluated for impact on steam quality as sampling strategies are developed.

This Document is licensed to
Taiwan,
ID number: 1002915

The geographic location of the plant may lead to variation in incoming water quality as well as variations in the type of chemical treatment in use (e.g., chlorine, chloramine, ozone, etc.). In some instances, ammonia may be present as a byproduct of the chloramine process. Ammonia and carbon dioxide are particularly troublesome since they will pass through a pure steam generator and will influence the non-condensable gas content as well as the conductivity. When such conditions exist case contaminant removal should be addressed through proper pretreatment and confirmed with appropriate sampling.

With no specific regulatory requirements dictating input water quality to a PSG, pretreatment equipment may vary widely. In general, less pretreatment equipment requires more rigorous sampling strategies to ensure that issues are detected and addressed before they impact PS quality. Conversely, in a situation where WFI is used as feed water to a PSG, sampling of the PS may be reduced because of the sampling already performed on the WFI feed water.

PSG designs may vary significantly based on incoming water quality and pretreatment equipment and may include mist eliminators, non-condensable gas removal, and adjustments to the blow down rate.

For individual use only. © Copyright ISPE 2016. All rights reserved.

A more detailed discussion of this topic is covered in Appendix 3.

The purification system generating the water feeding a PSG typically needs the same monitoring and maintenance attention as pretreatment systems feeding distillation units that generate WFI. This monitoring can help to optimize control of the pretreatment unit operations and steam generation process Monitoring could also serve to alert the user to take remedial action to avoid specification failures in the steam.

Though a water phase change process is reasonably efficient at separating pure water vapor from the chemical contaminants that stay behind in the evaporator, the separation is not absolute due to potential entrainment of mist from the incoming water (and its chemical contaminants) along with the generated steam.

It is commonly accepted that the phase change and mist elimination processes of distillation will purify that feed water by at least three orders of magnitude (≥ 1000-fold or ≥ 99.9% impurity reduction), allowing no more than 0.1% of the feed water impurities to remain in the distillate or steam (see the *ISPE Baseline® Guide: Water and Steam Systems (Second Edition)* [7]).

However, there may be important distinctions between the generation of WFI by distillation units and the generation of PS by steam generators. These distinctions relate to the nature of their source water, the unit operations designed to prepare that water for the generation of steam, and the associated mist elimination and blow down designs, all of which could impact the quality and performance of the PSG and pretreatment system.

3.8.1 Source Water

3.8.1.1 Pharmaceutical Grade Feed Water from WFI Systems

Organizations may choose to feed their PSGs with WFI, usually from a POU valve that is part of the WFI loop, although this is not required by compendia or regulation.

When the feed water to a PSG already has very low or undetectable levels of endotoxin, and is otherwise chemically pure, no additional PSG feed water pretreatment system monitoring is required. When properly operated, the chemical attributes of the PSG feed water are essentially the same as those of the steam it generates.

The WFI system pretreatment process should be monitored and controlled in order for the distillation process to produce WFI. For further information on sampling WFI systems, see Chapter 2 of this Guide.

3.8.1.2 Pharmaceutical Grade Feed from Purified Water Systems

The source water should already be chemically pure and sufficiently free from chemical contaminants (e.g., hardness and silica) that could damage the steam generator equipment, as well as from high levels of inorganic impurities and TOC. Organizations may choose to feed their PSGs with water from a PW distribution loop that may also feed other manufacturing uses, although this is not required by compendia or regulation.

However, with PW, there is no requirement that it is free from bacterial endotoxins; therefore, without specific microbial and endotoxin control precautions, excessive levels of endotoxin may be present.

Since PSGs have a finite impurity removal capability (including endotoxin), the endotoxin levels in the PW feeding the PSG should be monitored to ensure that the removal capability of the steam generator is not overwhelmed. However, assuming a minimum 3-log endotoxin removal capability and proper equipment operation, the endotoxin level in the feed water would have to be 100 EU/mL or greater to be problematic. PW systems with these levels of endotoxin typically occur only where there is very poor microbial control in the purification and/or distribution systems. Thus, depending on the requirement for and success of microbial control in the PW system and its historical endotoxin performance, monitoring the endotoxin level in that feed water from the PW distribution system may not be necessary.

Note: that this 3-log removal capability is a generalized capability that may vary.

For individual use only. © Copyright ISPE 2016. All rights reserved.

Depending on the PSG design (as discussed below), the log reduction capability may be higher, or it could be lower, especially in the absence of mist elimination. Although endotoxin is typically not monitored in a PW system used for manufacturing, if this PW is used as feed water for some PSG designs, monitoring endotoxin in the PW at appropriate intervals would be indicated.

3.8.1.3 Potable Water

The USP monograph for PS requires that it is prepared from water that meets at least the drinking/potable water requirements established by the US, EU, Japan, or the WHO drinking water guidelines. This is the same requirement for PW and WFI. However, in lieu of providing the feed water to the steam generator from a PW or WFI distribution system outlet, the user may use a dedicated potable water pretreatment system to provide this feed water. Although there is no compendial requirement that this water first meets PW or WFI specifications, it should be suitable feed water for the steam generator in terms of its chemical content that could affect the steam generator's maintenance (e.g., low levels of hardness, chlorine and silica content could create adverse effects), and final quality (i.e., low enough levels of conductivity, TOC, and endotoxin that it does not exceed the purification capabilities of the PSG, and absence of ammonia if chloramines are present in the potable water supply). This is discussed below. The source of the potable water supply could have a dramatic impact on its starting purity, and therefore, on the required pretreatment. In this case, a well-designed and well maintained pretreatment system would be required to assure proper PSG operation.

Based on the initial cost and the cost of maintenance/operation, it may be less costly to include additional capacity in the feed water system for PW and WFI systems for the PS system, than to use a dedicated and separate pretreatment system for the PSG.

3.8.2 Steam Generator Mist Elimination Capability

The USP monograph for pure steam specifically states that the pure steam generation process uses a process that "prevents source water entrainment". There are many pure steam, or clean steam, systems using PSGs that have no specific mist elimination capability, particularly in company locations either outside the jurisdiction of USP or for systems constructed prior to the USP pure steam monograph becoming official on 1 April 2006 [27]. These generators likely also have poorer log reductions of feed water contaminants than their mist eliminating counterparts.

Well designed and well operated systems using WFI as steam generator feed water essentially have no need for mist elimination since the feed water quality is already suitable for steam, so mist removal is of lesser concern. These users may have lower risk of unacceptable pure steam condensate relative to conductivity, TOC or endotoxin content due to the absence of mist elimination. Therefore, there may be no need to monitor the feed water for these critical attributes, even with a PSG without any mist elimination capability, as long as the WFI feed water complies with USP specifications and is not compromised by other aspects of the steam generation equipment or intermittent operation that may allow contaminants to develop in the PSG feed water from the pretreatment/purification system.

This Document is licensed to
[illegible]
Taiwan,
ID [illegible] 1993915
Downloaded on 6/7/22 2:22 AM

When using PW as steam generator feed water it should be understood that excessive endotoxin levels could be present, unless controls are active. As discussed above, endotoxin in this feed water should be sufficiently monitored (in addition to all other PW specifications) to ensure that the endotoxin levels continue to be low enough to be effectively removed by the PSG.

A standalone PSG feed water system that is either not well designed or not properly maintained carries a high risk of contaminant carry over into the PS. These systems can be significantly more susceptible to the variable quality of the incoming potable water and could also experience endotoxin and TOC generated in situ by the pretreatment system. Pretreatment systems feeding steam generators with no mist elimination are likely to need the rigorous monitoring of CQAs.

For individual use only. © Copyright ISPE 2016. All rights reserved.

3.8.3 Dissolved Gas Removal Capability

Without a dissolved non-condensable gas removal process prior to the PSG or as part of the steam generation process, these gases would come out of solution during the water vaporization process, mix with, and be present in the distributed steam. If little steam is actively being used and steam loss is primarily due to in situ condensation and removal at steam traps, these non-condensable gases can accumulate in the distributed steam piping system. If this steam is used for a porous load sterilization process, it could dramatically reduce the efficacy of the steam sterilization process. This is the main reason that the BS EN 285:2015 [19] and HTM 2010 [20] standards for non-condensable gases were created for steam used in sterilizers.

There is no simple direct test for these dissolved gases in feed water, but there are correlations that may be used. Dissolved gases have a higher solubility in cold water than in hot water. When the feed water to the PSG is already hot (as with many hot WFI feed water systems), the hot water will contain very little dissolved gas; therefore, steam systems whose feed water is hot normally have few problems with non-condensable gases in the distributed steam.

If the feed water to the generator is at ambient temperature where higher levels of dissolved gases will be present, it has the potential for containing dissolved gases (particularly CO_2), and at relatively high concentrations. If this ambient feed water is extremely high quality (very low conductivity) due to nearly complete deionization, it is unlikely there will be sufficient dissolved CO_2 to be problematic. There could, however, be other dissolved gases such as nitrogen and oxygen present, especially if the feed water uses any ozone process for microbial or TOC control.

Control of dissolved gas in PSG feed water is usually accomplished by pretreatment unit operations performing gas stripping or carbon dioxide removal or by using high efficiency deionizers. The performance of these unit operations should be monitored when ambient water is fed to steam generators whose operation must comply with BS EN 285:2015 [19] or when the application dictates.

3.8.4 Blow Down Adjustment

Monitoring of the blow down discharge coupled with periodic testing of conductivity, TOC, and endotoxin in the feed water may be appropriate to verify a blow down rate aligned with the manufacturer's recommendations and guidelines.

3.8.5 Potable Water Chloramine Use

The use of chloramines in potable water is one of the approaches encouraged by EPA to avoid the *in situ* generation of carcinogenic disinfection byproducts such as trihalomethanes (THMs) and haloacetic acids (HAAs). All incoming water to a PSG (as well as to a distillation unit) should be dechlorinated to avoid corrosion of the metals in the PSG. When chloramines are removed in a pretreatment step, however, ammonia may be present. If the ammonia is not removed prior to the PSG (or the distillation process), it can vaporize along with the steam, remain in the steam, and condense along with the distillate or steam condensate when it is sampled from the distribution system sampling ports, causing it to fail its conductivity specifications.

This Document is licensed to
Miss Olga Chung
Taiwan,
ID number 1092915
Downloaded on: 6/7/22 3:22 AM

Ammonia that is not removed from, and is allowed to enter the distillation unit or PSG, may produce conductivity spikes in the resulting distillate or steam condensate that fails to meet its conductivity requirements.

Additionally, a process that removes chlorine may not be as effective in removing chloramines. If this occurs in a standalone PSG pretreatment system, serious corrosion of the steam generator or distillation unit would result.

Further, ammonia exists in different states that are pH dependent and easy to control with the proper equipment. Therefore, it is recommended that the user monitor both ammonia and chlorine levels (both free and total) after the dechlorination step in the pretreatment train. A change from chlorine to chloramines by the water utility without notification can cause irreparable equipment damage and noncompliant WFI or PS, which may not be discovered immediately based on sampling frequency, potentially affecting finished product quality and impacting patient safety.

For individual use only. © Copyright ISPE 2016. All rights reserved.

Often, ammonia can be removed from pretreated water by a polishing softener, acidifying the feed water to an RO system, or by a full deionization process, but because of variations in ammonia removal efficiency, monitoring for ammonia could be an important process control effort to avoid specification failures.

Both chlorine and chloramines are considered acceptable potable water disinfectants. But if the potable water supplier neglects to inform pharmaceutical users of an impending change from one disinfectant to the other, there could be far reaching implications in finished water or steam quality. Hence maintaining lines of communication with potable water suppliers is important.

3.8.6 Anti-scaling Steam Additives

The use of steam additives to avoid metal corrosion in the steam generator and distribution piping is not allowed for PS systems. Many of these plant steam additives" tend to carry over into the steam and would cause the steam to fail its quality attributes. Depending on the nature of the additive, it might be detectable in the feed water as increased conductivity or TOC, but the best approach is by a specific test for each compound.

The nature of these additives may make them difficult to remove, so monitoring for these additives after their removal process step is important for ensuring that the pure steam meets its specifications when recycled condensate is used. Better than that, if the plant steam condensate system is kept separate, the potential for a problem will be eliminated.

Many plant steam systems capture the condensate from their steam traps and reuse this water to feed the plant steam generators. If the condensate collection system is shared between the plant steam and pure steam systems (this practice is not recommended).

3.8.7 Monitoring Locations and Frequency

There are no pretreatment system monitoring requirements (other than for using potable water as the feed water) that are mandated by the compendia or FDA for pure steam systems.

Pretreatment operation and monitoring should follow the guidelines established in this and other ISPE guidance documents for compendial water and steam systems (see the *ISPE Baseline® Guide: Water and Steam Systems (Second Edition)* [7] as well as the *ISPE Good Practice Guide: Approaches to Commissioning and Qualification of Pharmaceutical Water and Steam Systems (Second Edition)* [13]).

Specific chemical attributes (including endotoxins) may need to be periodically monitored in the:

- Incoming source water
- Feed water to the steam generator
- Between pretreatment unit operations

The frequency should be appropriate to each steam system.

This Document is licensed to
Miss Olga Chung
Taiwan,
ID number: 1002915
Downloaded on: 6/7/22 3:22 AM

For individual use only. © Copyright ISPE 2016. All rights reserved.

4 Process Gases

4.1 Introduction

This chapter contains information and best practices gathered from several major pharmaceutical organizations listing their current practices for assuring the quality of gases used in their operations. Testing may be performed by the pharmaceutical manufacturer or by a certified independent laboratory.

The quality of product contact compressed gases should be assured through adequate design, appropriate controls (e.g., change control or change management procedures), and routine maintenance of the system. If adequate controls are in place, critical compressed air and other process gas systems typically require analytical testing on a periodic basis to confirm that the system is operating under a state of control. Routine release testing (e.g., identification testing) of compressed air or process gases furnished by a qualified supplier may be required for release of incoming raw materials. If it is determined that analytical testing of a distribution piping system is necessary, the specification limits for the testing should be suitable for the intended use of the gas.

4.1.1 Types of Process Gases Covered in this Guide

This Guide considers the most commonly used gases.[9] The process gases covered in this Guide include:

- Compressed air
- Argon
- Carbon dioxide
- Nitrogen
- Oxygen

Process gases may be generated on site or may be provided by a qualified supplier as portable tanks, compressed gas cylinders, cylinders containing liquefied gases, or other types of containers. There may be variations in the number of sample points as well as the frequency of sampling. Decisions should be made after a risk analysis is performed.

4.1.2 Regulatory Requirements and Consensus Standards

This Document is licensed to

No well-defined regulatory requirements exist regarding the frequency, extent, or method of routine sampling for compressed air or other process gases. None of the pharmacopeia monographs specifies limits for particles or total viable counts (bacteria), but some consensus standards and US FDA guidance documents provide additional information and should be consulted as part of the risk analysis process.

Miss Olga Ching
Tsui-Yu
ID number: 1002915

Some monographs stipulate that the moisture content of compressed air and other process gases should be below -46°C (-50°F).[10] USP monographs indicate no standard methods for air sampling.

Downloaded on: 6/7/22 3:22 AM

[9] These gases reflect the gases covered in the *ISPE Good Practice Guide: Process Gases* [29].
[10] Equivalent to 67 ppm for compressed air.

For individual use only. © Copyright ISPE 2016. All rights reserved.

The 2004 US FDA "Guidance for Industry Sterile Drug Products Produced by Aseptic Processing – Current Good Manufacturing Practice" 2004 [30] provides the following nonbinding recommendation regarding the filtration of compressed air and other process gases:

> *"A compressed gas should be of appropriate purity (e.g., free from oil) and it's microbiological and particle quality after filtration should be equal to or better than that of the air in the environment into which the gas is introduced. Compressed gases such as air, nitrogen, and carbon dioxide are often used in cleanrooms and are frequently employed in purging or overlaying."*

ISO 8573 [31] is a universal standard that applies to all industrial uses and provides some information that is applicable to the pharmaceutical industry.

4.1.3 Critical Quality Attributes of Compressed Air and Process Gases

A sensible and logical method to determine the requirements for compressed air or process gases is to review the role played by the gas in the actual process in which it is used. Compressed air and process gases are utilities that are widely used in the pharmaceutical industry for many different applications. Examples include:

- Displacement or conveyance of product from one location to another
- As a feed source to fermentation processes
- Actuating pneumatic valves in classified and controlled areas and the resulting venting of exhaust gases into processing spaces where product contact may occur
- Occupying head space in lyophilization vials, solution vials, ampoules, etc.
- Occupying head space or acting as a blanket in a bioreactor
- Drying of product in fluidized beds
- Drying of product contact equipment surfaces
- As a carrier in spray tablet coatings
- As a carrier to suspend an API during micronizing or milling steps
- As a carrier to pneumatically convey dry powders
- As a blanket to provide an inert atmosphere within API vessels
- As a blanket or to pressurize WFI storage tanks where the compressed air or process gas comes into contact with WFI water, which may have direct product contact

This Document is licensed to
Miss Olga Chung
Taiwan,
ID number: 1002915
Downloaded on: 6/7/22 3:22 AM

Gaseous utilities may impact the product quality directly or indirectly as an:

- Excipient
- Material
- Raw material
- In process material

For individual use only. © Copyright ISPE 2016. All rights reserved.

- Inactive ingredient
- Component or ingredient
- Process aid

The broadest of these definitions is component or ingredient. For components/ingredients, there are regulatory expectations of specifications, and whenever there are specifications, sampling programs should be devised to document that the utility is operating under a state of control and satisfying the component specifications, shown in Figure 4.1.

Figure 4.1: Establishing Sampling Programs for Components/Ingredients

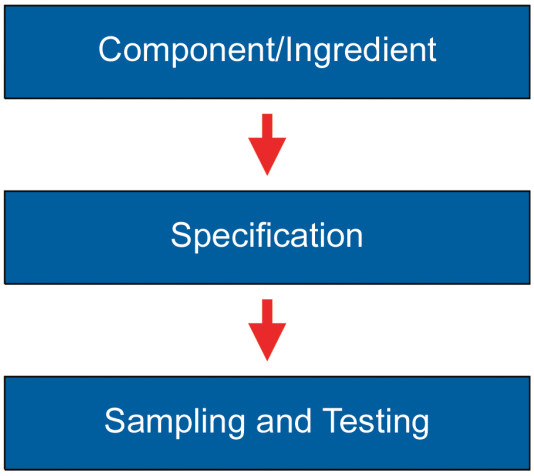

CQAs are best determined by risk analysis when considering the intended use of the compressed gas in the facility. Without restricting the type of gas under consideration, the CQAs are most generally defined as:

- Moisture content
- Total hydrocarbons
- Particles
- Viable particles (bacteria)

This Document is licensed to
Miss Olga Chung
Taiwan,
ID number: 1002915
Downloaded on: 6/7/22 3:22 AM

During the design and construction phases, other potential contaminants may be introduced as distribution systems are built, such as cutting oils, cleaning agents, or other materials used during system construction or subsequent maintenance activities. A risk analysis should be conducted to assess the likelihood of these other contaminants being present, to assist with the mitigation of their sources, and to develop testing strategies that may be applicable.

4.2 Sampling Locations

Sample points may be installed for varied reasons in a compressed air or process gas system, including:

- Quality control purposes
- Process control or diagnostic purposes

For individual use only. © Copyright ISPE 2016. All rights reserved.

Sample points intended for quality control purposes should be determined based on the CQA being monitored and on a suitably developed sampling plan.

Sample points intended for process control or diagnostic purposes should:

- Be used as needed to ensure that processes are under control
- Be regularly maintained
- Not introduce a risk of contaminating the system
- Not be included in the sampling plan

The determination of sample point location should be initiated during system design. Sampling locations should also be reviewed again during system modification to ensure appropriate sample ports are installed to meet the quality control and process control monitoring requirements established for the system.

Risk analysis tools may be utilized to define the sampling strategies for compressed air and process gas systems. Sample point locations may vary for quality control and process control purposes depending on which category the gas system falls under, i.e.:

1. Compressed air systems
2. Cylinder systems and liquefied gases provided in cylinders
3. On site generation and bulk storage systems

Compressed air systems are typically owned by the facility, whereas cylinder systems, liquefied gas systems, on site generation and bulk storage systems are typically rented or leased from qualified specialty gas suppliers.

Expectations for sampling points for compressed air and process gas systems include:

- Sampling points should be easily accessible
- The location of a sampling point should avoid locations common to other clean utilities, e.g., high purity water or PS to prevent cross contamination
- Sampling points should be clearly and uniquely identified on P&ID drawings and tagged in the field
- A risk analysis should be performed to:
    - Determine the CQAs for the gas
    - Identify sampling points required for quality control
    - Determine CQAs from samples taken from each quality control sample point
    - Identify sampling points required for process control
    - Determine important process parameters for each process control sample point
- Test results should be trended and reviewed annually, and sampling frequencies adjusted accordingly.

This Document is licensed to
Miss Olga Chung
Taiwan,
ID number 1002015
Downloaded on: 6/7/22 3:22 AM

For individual use only. © Copyright ISPE 2016. All rights reserved.

Typically, a sampling location should reflect the quality of a gas at the POU. However, for a gas line fitted with a POU sterile filter, the sampling point should be located before the sterile filter. Sampling in this location determines the quality of gas delivered to the sterile filter, while simultaneously avoiding the risk of product contamination from a sample point downstream of the filter.

4.2.1 Sampling Locations for Pharmaceutical Compressed Air Systems

Pharmaceutical compressed air is used in a pharmaceutical industry for many purposes. Pharmaceutical compressed air may also be referred to as compressed dry air or process air. Air that comes in direct contact with product and/or product contact surfaces can affect product quality. Compressed air quality should consistently meet specifications established for the process and should not adversely impact product quality.

In a compressed air system, sampling points may be installed at specific locations for quality control and/or process control purposes. For example, a sampling port installed before a final in-line filter on the central system would be installed to document process control up to this point in the system, but may not be part of the quality control sampling system. The intended purpose of each sampling point should be specified in the quality plan for the system.

Examples of process control sample point locations intended to assess the compressed air quality include:

- After the compressor, dryer, and coalescing filter on the central system
- Before and after any in-line filters on the central system and prior to the distribution system

Examples of quality control sample locations include:

- Following any central treatment process intended to control the levels of an identified CQA
- The central supply header of the distribution system
- The most distant POU from the central system on each floor
- Prior to a POU final filter if the POU cannot be sampled

Results from samples taken from distant ports would be compared to results from the supply header and used to determine if contamination issues exist in the distribution pipework. Excursions above Alert and Action Levels would likely trigger sampling at additional points.

CQAs for the compressed air system should be determined by coupling risk analysis tools with the intended use of the compressed air in the facility, but typically involve sampling for:

This Document is licensed to

- Moisture content
- Total hydrocarbons
- Viable and nonviable particles

Miss Olga Chung
Taiwan,
ID number: 1002915

With these CQAs, the following sampling locations represent sampling that would be performed for quality control purposes. Sampling for moisture is typically performed:

Downloaded on: 6/7/22 3:22 AM

- Following a drying process, before compressed air is introduced to the distribution piping system
- At the farthest end of a distribution line serving a floor, prior to the farthest POU in the system

For individual use only. © Copyright ISPE 2016. All rights reserved.

Sampling for total hydrocarbons (oil) is typically performed:

- After the final coalescing or oil removal filter in the system (Note: hydrocarbon testing may be performed prior to these oil removal processes, or during intermediate steps if several are involved, but these samples would represent process control sample points)
- At the end of a distribution line serving each floor, prior to the most distant POU in the system
- At critical POUs

Sampling for Non-Viable Particles and Viable Particles (NVP/VP) is typically performed:

- After the final central system filter as compressed air is introduced to the distribution piping system
- At the most distant end of a distribution line serving each floor, prior to the most distant POU in the system
- At critical POUs

During the construction phase other potential contaminants, such as cutting oils or cleaning agents used in system construction or subsequent maintenance activities, should be considered.

A risk analysis should be performed to determine the likelihood of other contaminants which may be present and to assist with the mitigation of their sources, or the development of testing strategies where applicable. When a system has been verified through sampling and testing to be clean, testing frequencies within the distribution system may be reduced because distribution piping systems prevent the ingress of contaminants. For additional discussion on this matter, refer to the *ISPE Good Practice Guide: Process Gases* [29].

Note: Figure 4.2 is provided for illustrative purposes only and should not be considered as an industry standard or recommendation for system design.

Figure 4.2: One Potential Compressed Air System Design with Sampling Points for Both Process Control (PC) and Quality Control (QC) Purposes

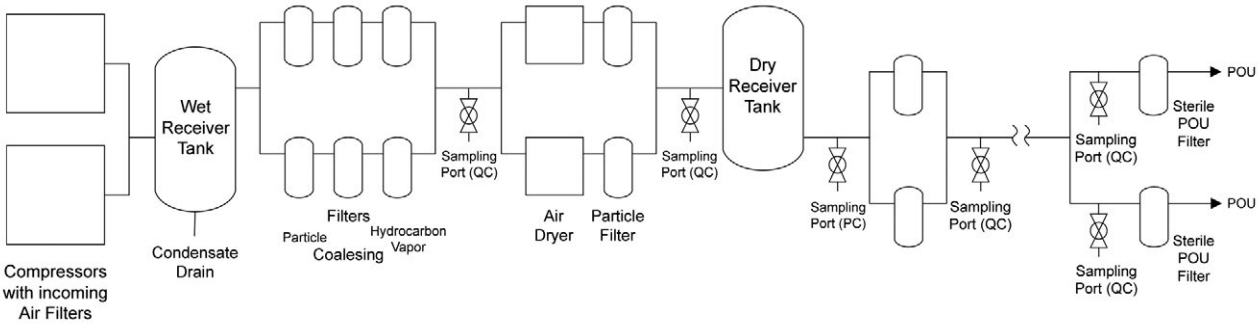

Figure 4.2 shows a typical compressed air system design utilized in a pharmaceutical manufacturing facility. Sampling ports have been positioned throughout the system. Most sampling ports have been installed for process control purposes. Where possible, compressed air quality attributes may be monitored using on-line instrumentation.

Sampling locations monitored for quality control purposes should be incorporated into an established sampling plan. The types of sampling and locations of sampling points include:

- Moisture content monitoring by dew point indicator
  - following the central system drying process following the furthest final filter in the distribution piping system

For individual use only. © Copyright ISPE 2016. All rights reserved.

- at critical POUs

- Hydrocarbon monitoring
  - following the central system microcoalescer
  - prior to the furthest POU in the distribution piping system
  - at critical POUs

- Nonviable and viable particle monitoring
  - following the central system final filter
  - prior to the furthest final filter in the distribution piping system
  - at critical POUs

4.2.2 Sampling Locations for Process Gases Delivered in Cylinders and for Liquefied Gases Delivered in Cylinders

A typical example of a cylinder based compressed gas system is shown in Figure 4.3 and that of a liquefied gas system are shown in Figure 4.4. Since there are fewer steps in each of these systems, fewer sample points are required as the finished product is supplied by a qualified supplier and piped to each POU by connecting the cylinder to the distribution piping system. Sampling ports or valves are usually installed at the points as indicated. Depending on the critical quality attributes established for the process gas, the following sample ports would be utilized for quality control purposes, with other indicated ports being used for process monitoring purposes:

- Moisture (if required) by dew point indicator following final filter, prior to furthest final filter, or at critical POUs

- Nonviable and viable particles (if required) would be sampled prior to the furthest final filter or at critical POUs

In many cases, there is no POU filter and the actual POU would be used as the sampling location.

Figure 4.3: Sampling Points for Gases Delivered in High Pressure Cylinders

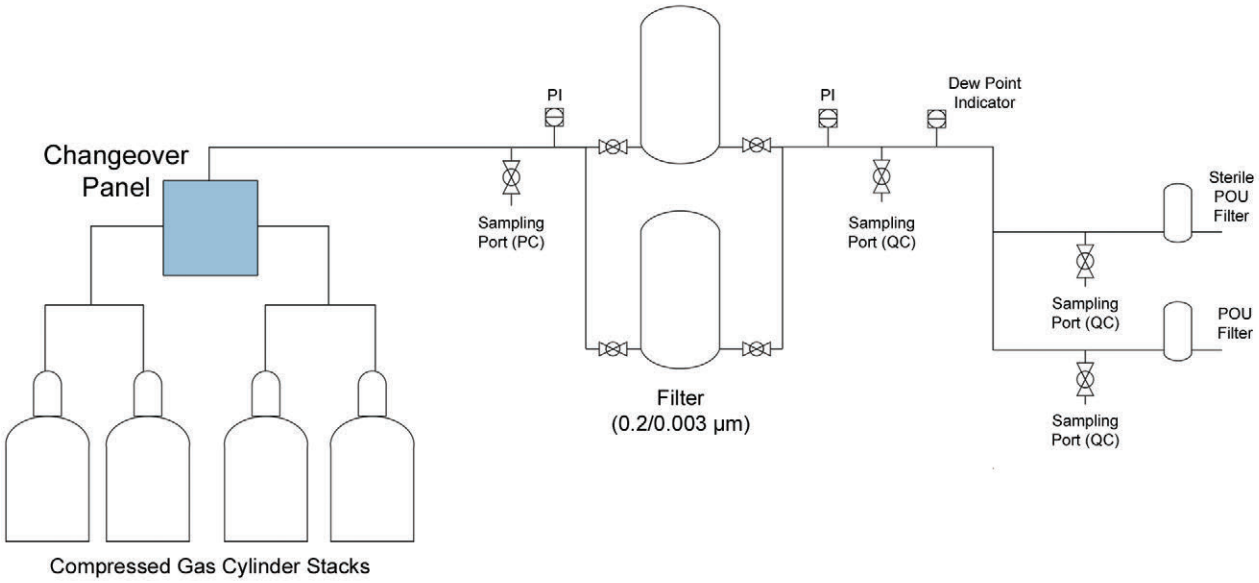

For individual use only. © Copyright ISPE 2016. All rights reserved.

Figure 4.4: Sampling Points for Gases Delivered from Liquefied Storage Tanks

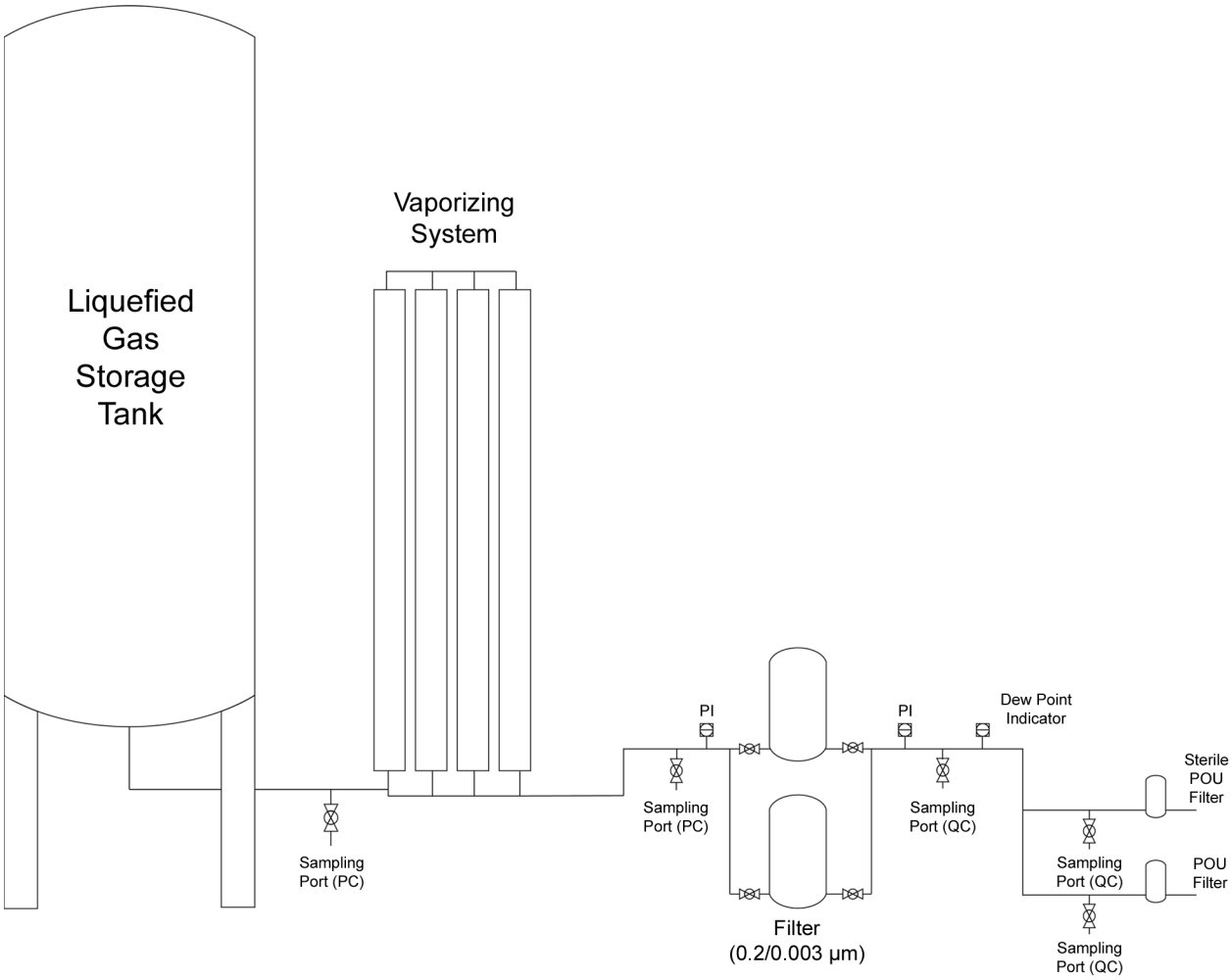

4.2.3 On Site Generation and Bulk Storage Systems

On site generation and bulk storage systems vary significantly depending on the process gas involved, but should follow the general rules outlined for compressed air systems discussed earlier in this chapter. Sample locations should be carefully reviewed and installed for both process control and quality control purposes in a similar fashion to those outlined for compressed air systems.

This Document is licensed to
Miss Olga Chung
Taiwan,
ID number: 1002915
Date: 2016-07-08

4.3 Sampling Plan (Tests Performed, Frequency and Duration)

4.3.1 General Considerations

Compressed air or other process gases should be monitored at a frequency that would assure that gas does not adversely affect the environment or the product. Routine monitoring frequency should be similar to the frequencies established for the cleanroom, but these frequencies can be adjusted using the risk analysis tools once a base of historical data has been generated.

For individual use only. © Copyright ISPE 2016. All rights reserved.

4.3.2 Risk Analysis for Sampling

Risk analysis of process gas systems should be performed upon initial system design and construction, or following significant system modifications. This risk analysis should identify sampling points that may present a risk to:

- Product
- Environment
- The integrity of the gas system

These risks should be based on, but not limited to, system validation, routine monitoring, and system application.

Risk analysis principles should include the inherent risk of both viable and nonviable particulate level requirements that may already be controlled through adequate system design and utilization of critical POU filtration and maintenance.

Compressed air and process gas systems typically are designed, controlled, and maintained in a dry state (i.e., very low dew point), which inherently reduces the risk of microbial growth. Filter selection is dependent on the intended use of the compressed air or process gas at the POU, and the particulate requirements/tolerances are typically defined during the system design phase.

4.3.3 Background Philosophy

Sampling and testing of compressed air and process gases can be broadly classified based on the phases of system life cycle, i.e.:

- Commissioning (prequalification)
- Initial performance qualification
- Requalification during major or minor changes to the system
- Routine monitoring

4.3.3.1 Sampling for Commissioning (Prequalification)

Sampling during commissioning or prequalification of a compressed air system is recommended for gas generation and distribution to prove the performance of individual unit operations like compressor or dryer.

This Document is licensed to

Process compressed gas distribution systems from cylinders do not normally require any sampling during commissioning.

Miss Olga Chung
Taiwan,
IP Number: 1003015

4.3.3.2 Sampling for Performance Qualification

Qualification of compressed air or process gases intends to verify the distribution piping is clean and free of oil and contains acceptable levels of other impurities/contaminants. Compressed gas system qualification typically involves a minimum of three days of sampling and testing at specified sampling locations.

Downloaded on: 6/7/22 3:22 AM

CQAs that are monitored at each sampling location in a compressed air system include:

1. Total particulates (viable and nonviable)
2. Viable particulates

For individual use only. © Copyright ISPE 2016. All rights reserved.

3. Total hydrocarbons (both aerosol droplets and vapors)

4. Dew point (moisture content)

Sampling for process gases provided in cylinders, or as liquefied gases, may require less sampling, as some of these CQAs may have been eliminated during the risk analysis process. Sampling may be performed from the sampling locations after the final filter and critical POU at the farthest end of the longest pipe run of each floor of the building served by the system

The purity of the gas delivered by cylinders may be verified through Certificates of Analysis (CoA) provided by the manufacturer of the particular gas. If the process gas is considered a raw material, then raw material qualification is performed to provide assurance of the quality of the gas being used. Periodic testing, sampling, or third party testing may be required in cases where the typical CoA provided by the manufacturer has not indicated all the specification limits required for the raw material. It is important to remember that the pharmaceutical manufacturer is responsible for all quality attributes that impact raw material and finished product quality.

4.3.3.3 Sampling after Major/Minor Changes in the System

Qualification involving gas sampling and testing should be required for all new systems and also for any change to the design of the existing system. A major modification includes any change to a system that has the potential to affect the quality of the compressed air or process gas that is being delivered through the distribution system to the process.

Examples of a major change to an existing compressed air system includes, but not limited to, changes in a unit treatment process, distribution piping changes, or additions to the piping system.

Minor changes would involve the addition of a single valve or a minor system repair. Normal routine sampling and testing may continue but additional testing may be required based on the extent of the system alteration and the risk to product. Established procedures should define and identify the applicable test requirements.

4.3.3.4 Routine Monitoring

Qualified compressed air and process gas systems should be monitored at established frequencies. In cases where the gas is entering a classified area, it is required to at least meet the room classification limits established for the cleanroom environment.

The frequency of routine quality control monitoring at representative points of use and other established points should be developed based on risk analysis tools. Suggested monitoring frequencies for CQAs identified by risk analysis processes are indicated in Table 4.1. It is important to note that these attributes may not apply to all gases being tested.

This Document is licensed to
Mr. Chen Chen
Taiwan
ID number: 1002913
Downloaded on: 6/7/22 3:22 AM

Table 4.1: Recommended Routine Monitoring Frequencies for Compressed Air Systems

Test	Frequency/Location
Nonviable Particles	Tested every three months on a rotating basis for sampling locations following the central system final filter and at predetermined locations on the horizontal piping run for each floor
Viable Particles	Tested every three months on a rotating basis for sampling locations following the central system final filter and at predetermined locations on the horizontal piping run for each floor
Dew Point (moisture)	Monitored continuously using on-line dew point instrumentation following compressed air dryer
Hydrocarbon (oils)	Annual sampling and testing following the coalescing filter to verify the hydrocarbon content of the compressed air system

For individual use only. © Copyright ISPE 2016. All rights reserved.

The sampling location on a gas line fitted with a 0.2 µm/0.22 µm final hygienic filter should be located before the final filter. Sampling before the POU hygienic filter should represent the quality of air delivered to the POU or process and at the same time avoid any contamination risk posed by a sample valve located downstream of the final filter. A sample should represent the quality at a POU and the sampling location used should be demonstrated to represent the quality at POU.

4.4 Sample Valve Design

Sample valves located within a central compressed air or process gas treatment system may be ball valves when installed prior to the central system final filter and prior to distribution. Sampling valves and POU valves located in the distribution piping system have stricter requirements and are usually diaphragm valves. For example, when the installation of a hygienic, pharmaceutical grade 0.22 µm filter is required in close proximity to the POU, it should be installed in a suitably clean housing attached to the POU valve to minimize contamination of the gas stream. The filter housing with the filter placed in it requires the ability to be sterilized and kept sterile until it is placed in the piping system for use.

4.5 Sampling Techniques for Compressed Air and Process Gases

Sampling techniques will vary based on the contaminant being monitored. Each will be discussed below.

4.5.1 Total Particles, Non-viable and Viable

The selection of a sampling method is dependent on the concentration and size range of the impurity/contaminant being monitored. Other evaluation criteria include sampling times, air volumes, and allowable outlet pressure restrictions.

Sampling equipment should be within calibration, if applicable. Refer to equipment manufacturer's guidelines for particle size and concentration measurement limits.

Any gauges, adaptors, fittings, or tubing used to connect the sampling equipment to the sampling outlet should be clean and particle free, and should not introduce contamination to the collected sample. The preferred connection to sampling equipment should be as short as practical, constructed of stainless steel or other suitable material, and without sharp bends (approximately a 6 inch radius if bends are present), and non-restrictive. Softer metals such as brass or copper can produce particles when joined and should not be utilized.

Methods include laser particle counting with a high-pressure diffuser, condensation nucleus counting coupled with scanning mobility particle sizing, differential mobility analysis, and membrane capture as covered in ISO 8573-4:2001 [32]. Other acceptable methods may be available.

This Document is licensed to
[illegible]
Taiwan,
[illegible]
Downloaded on: 6/7/2023 2:22 AM

It is important to note that flow meters, control valves, pressure gauges, quick connect fittings and polymeric tubing can shed particles into the sampling stream. If these items must be used, specify non-shedding materials to minimize the contamination of the collected sample.

When closed, valves will capture particles; and when opened the captured particles will be released. Friction on the valve seals will also release particles. If a valve is required for flow regulation, specify a high purity diaphragm or bellows valve; seal material must not be composed of rubber or other polymeric materials, with the exception of Teflon. Valves and regulators should be fully opened to minimize particle shedding as partially opened components will shed more particles.

Tubing materials for minimizing particle contamination in order of preference are as follows: stainless steel, conductive polymer, polyester, vinyl (if plasticizer does not interfere), polyethylene, copper, glass, Teflon, and aluminum.

For individual use only. © Copyright ISPE 2016. All rights reserved.

4.5.2 Solid Particles, Viable Bacteria

Viable particles or microbial particles may be monitored using several different techniques.

The **slit to agar technique** operates via a fixed rate air flow and fixed motor carriage to rotate an agar plate at constant speed (typically 30 minutes to complete one revolution). Plate position, specifically the media surface is positioned at a defined distance from the location of the air outlet slit.

The **impaction technique** is where air is forced perpendicular to the agar surface through a diffuser of fixed holes to monitor bacterial levels.

Hydrophilic membranes may be utilized. This involves passing a fixed volume of air (or process gas) through the membrane where the microorganisms are captured. Enumeration using conventional laboratory techniques can be used to determine bacterial counts.

Real time monitoring is a rapidly evolving technique with great potential and applicability in the pharmaceutical industry. A sample of the gas stream is passed through an analyzer and the presence of microorganisms is directly monitored by one of several different techniques as developed by instrument manufacturers. Progress is being made at a rapid rate in this area by manufacturers as there is a huge demand for on-line, real time microbiological monitoring. Different analytical techniques may have varying capabilities and limits of detection, but rapid improvement in this field may change the landscape for real time microbiological monitoring in the very near future.

4.5.3 Water Vapor

If moisture content testing is determined to be necessary, limits for moisture may include applicable EP pharmacopoeia limits. Moisture levels are typically controlled via adequate system design, operation and maintenance. Moisture content is typically monitored using on-line instrumentation providing real time information. For systems where the level of moisture is considered critical, the instrumentation and alarms associated with the monitoring of moisture levels should be commissioned and qualified.

> *"Moisture in process gases is usually measured as either dewpoint or pressure dewpoint. Methods include condensation devices, (Cooled Mirror Dewpoint, Electrolytic, and Impedance Hygrometers, and Polymer Film Relative Humidity Sensors), instrumentation devices (Chilled Mirror, Electrolytic, and Impedance Hygrometers, Polymer Film Relative Humidity (RH) Sensors)."* [29]

Other acceptable methods may be available.

> *"When using a hygrometer, the temperature and line pressure should be accounted for during dewpoint measurements. The instruments may be used in line for continuous monitoring or may be used to periodically monitor critical POUs.*
>
> *The type used should be determined by the degree of accuracy required for downstream processes, maintenance and calibration schedules, costs, and equipment reliability. For on line testing of moisture, indicator tubes may be used. Ingress of external environmental moisture into the sample path should be avoided."* [29]

Sampling equipment should be maintained in a calibrated state, if applicable. Refer to equipment manufacturer's guidelines for concentration measurement limits.

As mentioned earlier, the sampling process and/or equipment should not introduce contaminants to the sample being collected.

This Document is licensed to
[illegible]
Taiwan,
IP address: 1.[illegible].15
Downloaded on: 6/7/22 3:22 AM

For individual use only. © Copyright ISPE 2016. All rights reserved.

The following is an excerpt taken from ISO 8573-3:1999 Annex C, C.2.2, page 11 [33]:

> *"[Flush] sample lines and hygrometers with dry gas, or by evacuating to low pressure. Drive off stray residual water by baking assemblies if possible ... The lower the moisture content to be measured, the more dramatically the drying time multiplies...*
>
> *Select impermeable materials, to avoid inward diffusion of moisture through sampling tubes and enclosures. Steel and other metals are practically impermeable. [Teflon] is only slightly permeable and will usually be satisfactory for dew points above -20°C…. Materials such as polyvinyl chloride (PVC), nylon and rubber are … not really satisfactory in any humidity range.*
>
> *Surface finish is important [particularly] at very low humidities…. Polished or electropolished stainless steel is recommended for the best results…. Sample tubing should be as short in length as possible [and] surface area should be minimized …. [Minimize] the number of connections [where possible]. [Dead legs] in tubing [can trap moisture and} should be avoided."*

When using chemical reaction tubes (detector tubes) to manually sample for moisture content, care should be taken to follow the manufacturer's instructions. After the tips of the detector tube are broken the tube should be inserted immediately into the sampling device. With training and proper technique, the diffusion of water laden atmospheric air into the tube, as it is attached to the sampling device is negligible. After the detector tube is removed from sampling apparatus, immediately read the color change. Detector tube readings provide water concentration in mg/m3. It is common practice to then convert the readings to ppm to determine either dew point at atmospheric, system, or line pressure based on the specifications established for the system. When comparing test results to air quality requirements make certain that units of measure are compatible [29].

4.5.4 Total Hydrocarbon: Oil Aerosol and Oil Vapor

Total hydrocarbon includes both oil aerosols[11] and oil vapors[12], which are detected differently. Both types are typically associated with oils introduced as part of a compressed air system as oils are typically not present in cylinder based systems. The selection of a sampling method is dependent on the anticipated level of oil expected from the point being sampled as well as whether the oil would be present as an aerosol or vapor.

The total hydrocarbon content within compressed air systems is typically addressed through the use of design or engineering controls by installing oil free compressors, which eliminate the vast majority of hydrocarbon and related issues. Some compressors are oil free, but there may still be components within the compressor that utilize oil. Removal of oil aerosols from these systems is performed through the use of coalescing filters located in the distribution system. Where design or engineering controls are in place, oil aerosols are not typically expected to be present in the system and annual or less frequent testing or monitoring is required.

This Document is licensed to
Miss Olga Chung
Downloaded on 6/7/22 3:22 AM

Methods for sampling include the use of pre-weighed filter membrane(s) or detector tubes. When using filter membranes, install in a suitable holder with subsequent analysis by gravimetric or infrared techniques. Obtain a sufficient air volume to provide reliable results at the limit of detection.

Should oil aerosols not be effectively removed, they may accumulate and coalesce into larger oil droplets and eventually into oil liquid that may become visible. If oil liquid is observed, the system must be immediately shut down and the cause of failure determined as oil liquid is intolerable in pharmaceutical manufacturing.

For oil vapors, the selection of a sampling method is dependent on the established air quality limits. ISO 8573-1:2010 [34] considers oil vapor measurement to be optional if the purity limit is > 1.0 mg/m^3 due to the low impact on results higher than 1.0 mg/m^3. Other evaluation criteria include sampling times, air volumes, and allowable outlet pressure restrictions.

[11] *"Oil aerosol is the term for oils that can form an aerosol that will remain suspended in the air until it impinges against a surface."* [29]
[12] Also called total volatile hydrocarbons.

For individual use only. © Copyright ISPE 2016. All rights reserved.

Typical oil vapor levels reported for breathing air include gaseous hydrocarbons with up to ten carbons (C_{1-10}). ISO 8573-1:2010 [34] defines oil to be a mixture of hydrocarbons composed of six or more carbon atoms (C_{6+}). Method of collection varies depending on the expected molecular weight of the hydrocarbon vapors to be detected. Glass or stainless steel cylinders can be used for lower molecular weight hydrocarbons (C_{1-10}). Commercially available charcoal tubes or cylinders packed with charcoal are suitable for collection of samples expected to contain higher molecular weight hydrocarbon vapors (C_{6+}).

4.6 Sample Handling

Samples should be analyzed as quickly as possible after collection.

Samples should be clearly and uniquely labeled. Labels for internal analysis should include the following information:

- Sample or location identification
- Analysis to be performed
- Type of preservation required, if any
- Sampling media identification numbers
- Sampling parameters (i.e., sampling time, flow rate, temperature, pressure, etc.)
- Date and time sample collected
- Sampling technician name and signature

Labels for samples submitted to third parties for analysis should also include the company name and contact information.

4.6.1 Chain of Custody

Chain of custody documentation establishes that the sample has been properly transmitted from sample collection through sample analysis and is a recommended practice. If a collected sample is submitted to an outside firm for analysis, sample transport will be required and the bill of lading or airbill will become part of the chain of custody. Chain of custody seals or evidence tape may be used but are not mandatory.

This Document is licensed to

4.7 System Monitoring

Monitoring approaches may vary between pharmaceutical companies for process gases and compressed air, but these variations are always attributed to the products being manufactured at a facility and the corresponding CQAs that have been identified for the gas during the risk analysis process.

Taiwan,
IP address: 1.169.1.15
Downloaded on: 6/7/22 3:22 AM

Performing a Hazard Analysis and Critical Control Points (HACCP) may be utilized for the creation of critical utility system monitoring programs. Typical routine monitoring programs and frequencies have been described in Table 4.1.

For individual use only. © Copyright ISPE 2016. All rights reserved.

5 Appendix 1 – Specification Summary for Various Non-Pharmacopeial Water Grades

Organization/ Reference	ISO 3696 (1995) Water for Analytical Laboratory Use			ASTM D1193-06 (2011)[1] Standard Specification for Reagent Water				ASTM D5196 (2006)	CLSI 4th Ed (2006)
Water Grade or Type	Grade 1	Grade 2	Grade 3	Type I	Type II	Type III	Type IV	Standard Guide for Bio-App lications Grade Water	CLRW (Specified quantitative attributes only)
Specified Source and Purification Approaches	Grade 2 Source; RO +0.2 µm Filt, or DI +0.2 µm Filt, or Re-Dist (in glass)	Multiple-Dist or DI or RO+Dist	Single-Dist or DI or RO	< 20 µS/cm Source (Dist, equiv); MB-DI +0.2 µm Filt	Distillation or Equiv.	Distillation, DI, EDI, and/or RO +0.45 µm Filt	Distillation, DI, EDI, and/or RO	Drinking Water Source; Suitable Process(es)	*
pH value at 25°C (inclusive range)	*	*	5.0 to 7.5	*	*	*	5.0 to 8.0	*	*
Conductivity µS/cm @ 25°C, max	0.1	1.0	5.0	0.0555	1.0	0.25	5.0	*	*
Resistivity MΩ-cm @ 25°C, min	*	*	*	18	1.0	4.0	0.2	18.2 ± 1[2]	10
Temperature Compensated Conductivity Measurement?	YES	YES	YES	YES	YES	YES	YES	YES	YES
TOC (as C), max	*	*	*	50 µg/l (50 ppb)	50 µg/l (50 ppb)	200 µg/l (200 ppb)	*	20 µg/L (20 ppb)	500 ppb
Oxidizable Substances (Permanganate Red. Subst.)	*	*	*	*	*	*	*	*	*
Oxidizable matter O_2 content mg/l, max	*	0.08	0.4	*	*	*	*	*	*
Absorbance at 254 nm and 1 cm optical path length, absorbance units, max	0.001	0.01	*	*	*	*	*	*	*
Residue after evaporation on heating at 110°C, mg/Kg, max	*	1	2	*	*	*	*	*	*
Residue after evaporation on heating at 105°C, mg/100 ml, max	*	*	*	*	*	*	*	*	*
Silica (as SiO_2) mg/l, max	0.01	0.02	*	*	*	*	*	*	*
Total Silica µg/l, max	*	*	*	3	3	500	*	*	*
Sodium µg/l, max	*	*	*	1	5	10	50	*	*
Chloride µg/l, max	*	*	*	1	5	10	50	*	*
Heterotrophic Bacteria Count cfu/ml, max				*	*	*	*		
	*	*	*	Grade A: 0.01 (10 cfu/ 1000 ml)	Grade A: 0.01 (10 cfu/ 1000 ml)	Grade A: 0.01 (10 cfu/ 1000 ml)	Grade A: 0.01 (10 cfu/ 1000 ml)		
	*	*	*	Grade B: 0.1 (10 cfu/ 100 ml)	Grade B: 0.1 (10 cfu/ 100 ml)	Grade B: 0.1 (10 cfu/ 100 ml)	Grade B: 0.1 (10 cfu/ 100 ml)	1 (100 cfu/ 100 ml)	10
	*	*	*	Grade C: 10 (1000 cfu/ 100 ml)	Grade C: 10 (1000 cfu/ 100 ml)	Grade C: 10 (1000 cfu/ 100 ml)	Grade C: 10 (1000 cfu/ 100 ml)		

This Document is licensed to
Miss Olga Chung
Taiwan,
ID number: 1002915
Downloaded on [illegible]

For individual use only. © Copyright ISPE 2016. All rights reserved.

Organization/ Reference	ISO 3696 (1995) Water for Analytical Laboratory Use			ASTM D1193-06 (2011)(1) Standard Specification for Reagent Water				ASTM D5196 (2006)	CLSI 4th Ed (2006)
Water Grade or Type	**Grade 1**	**Grade 2**	**Grade 3**	**Type I**	**Type II**	**Type III**	**Type IV**	**Standard Guide for Bio-App lications Grade Water**	**CLRW (Specified quantitative attributes only)**
Specified Source and Purification Approaches	**Grade 2 Source; RO+0.2 µm Filt, or DI+0.2 µm Filt, or Re-Dist (in glass)**	**Multiple-Dist or DI or RO+Dist**	**Single-Dist or DI or RO**	**< 20 µS/ cm Source (Dist, equiv); MB-DI + 0.2 µm Filt**	**Distillation or equiv**	**Distillation, DI, EDI, and/or RO + 0.45 µm Filt**	**Distillation, DI, EDI, and/or RO**	**Drinking Water Source; Suitable process(es)**	*
Bacterial				*	*	*	*		
Endotoxins EU/ml or IU/ml	*	*	*	Grade A: 0.03	Grade A: 0.03	Grade A: 0.03	Grade A: 0.03	0.01	*
	*	*	*	Grade B: 0.25	Grade B: 0.25	Grade B: 0.25	Grade B: 0.25		
	*	*	*	Grade C: *	Grade C: *	Grade C: *	Grade C: *		
Nitrates ppm, max	*	*	*	*	*	*	*	*	*
Aluminium ppb, max	*	*	*	*	*	*	*	*	*
Heavy Metals ppm, max	*	*	*	*	*	*	*	*	*
Other Inorganic Attributes	*	*	*	*	*	*	*	*	*
Particulate and Colloids	Implied limitation by 0.2 µm filter	*	*	Implied limitation by 0.2 µm filter	*	Implied limitation by 0.45 µm filter	*	*	Implied limitation by 0.22 µm filter
Nucleases, Proteases	*	*	*	*	*	*	*	Limited as needed for certain applications	*

Footnotes:
* Not Specified, Not Required, Not Applicable, or No Limit
(1) Water may be produced with alternate technologies if specifications are met and water is appropriate for the application.
(2) If in-line resistivity testing is not possible, then the total concentration of inorganic ions must not exceed 1µg/L for cations such as Aluminum, Ammonium, Arsenic, Cadmium, Chromium, Cobalt, Copper, Iron, Lead, Magnesium, Nickel, Potassium, Sodium, Titanium, Zinc, and anions such as Chloride, Nitrate, Phosphate, Sulfate, and Fluoride.

This Document is licensed to

Miss Olga Chung
Taiwan,
ID number: 1002915

Downloaded on: 6/7/22 3:22 AM

For individual use only. © Copyright ISPE 2016. All rights reserved.

6 Appendix 2 – Examples of Water System Sampling Point Locations

*System Boundary designations.

Note: these figures are found in Appendix 3 of the *ISPE Good Practice Guide: Approaches to Commissioning and Qualification of Pharmaceutical Water and Steam Systems (Second Edition)* [13].

Figure 6.1: POU Piping Direct Connect to Process Equipment System Classification Example (modified for this Guide)

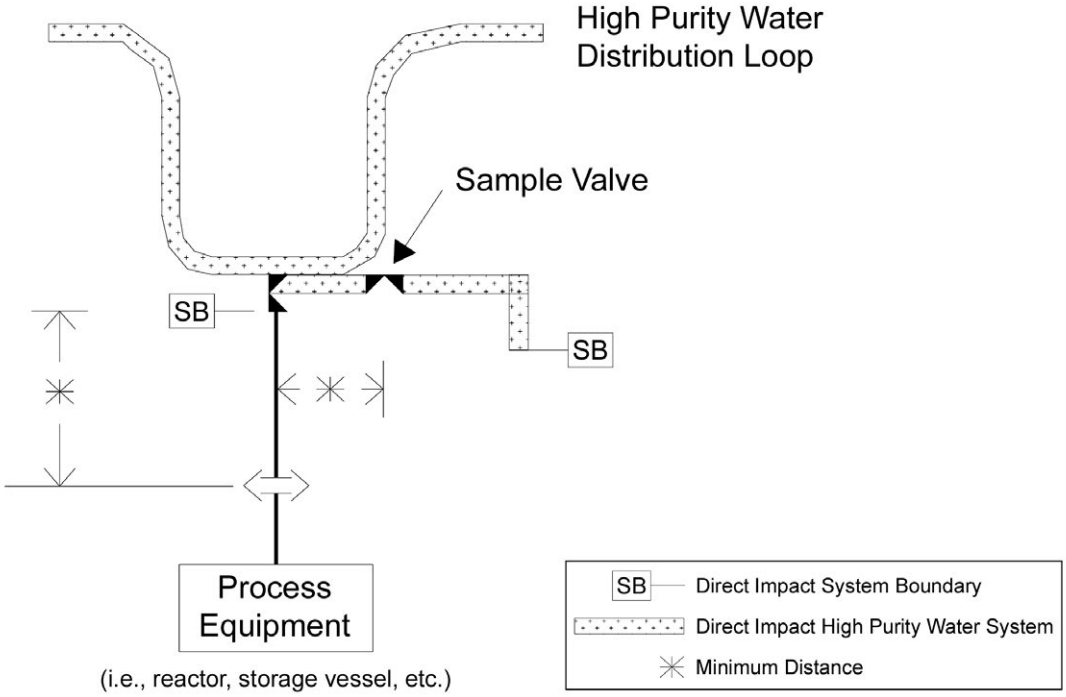

This Document is licensed to

Miss Olga Chung
Taiwan,
ID number: 1002915

Downloaded on: 6/7/22 3:22 AM

For individual use only. © Copyright ISPE 2016. All rights reserved.

Figure 6.2: POU Hard-Piped to Process Equipment System Classification Example (modified for this Guide)

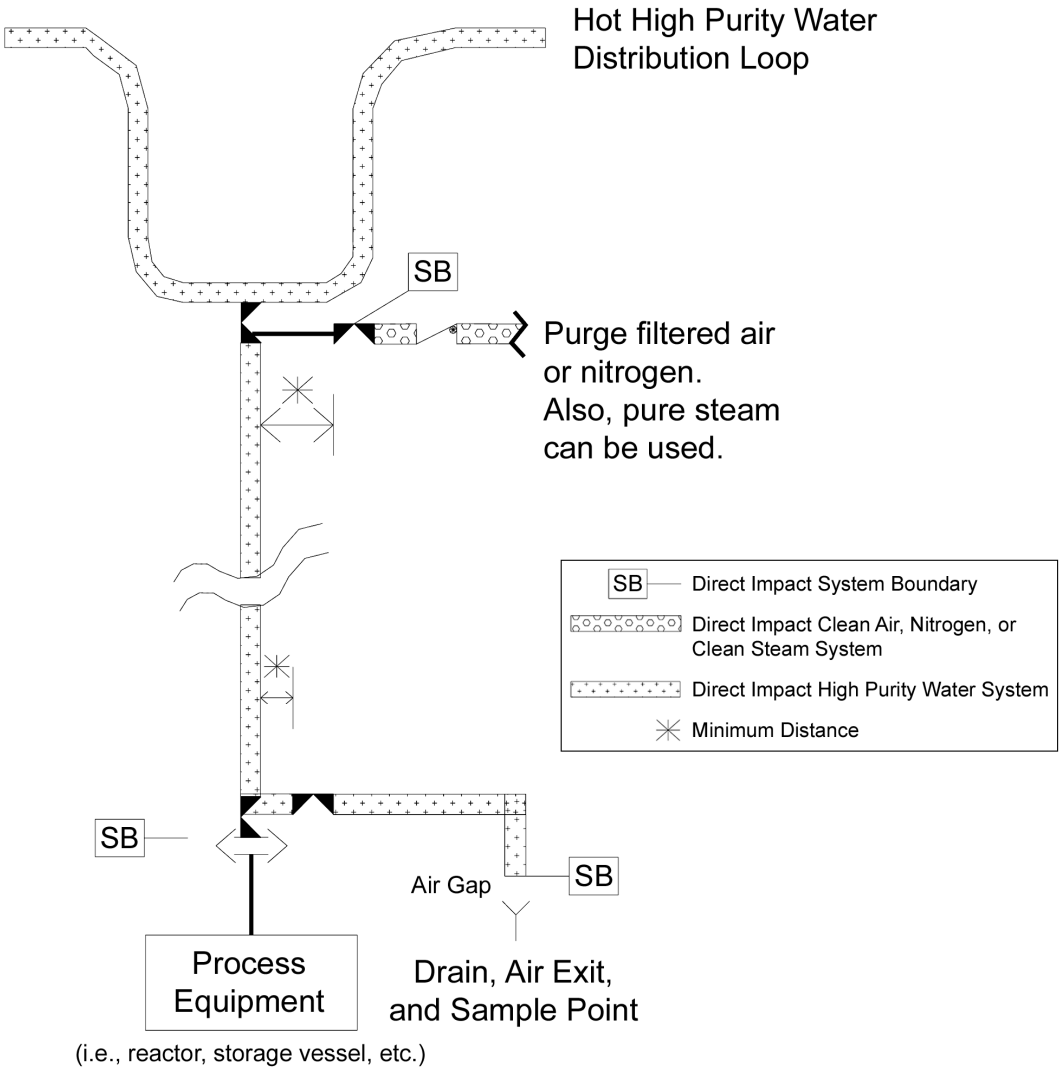

This Document is licensed to

Miss Olga Chung
Taiwan,
ID number: 1002915

Downloaded on: 6/7/22 3:22 AM

For individual use only. © Copyright ISPE 2016. All rights reserved.

Figure 6.3: POU Piping with Integral Heat Exchanger System Classification Example (modified for this Guide)

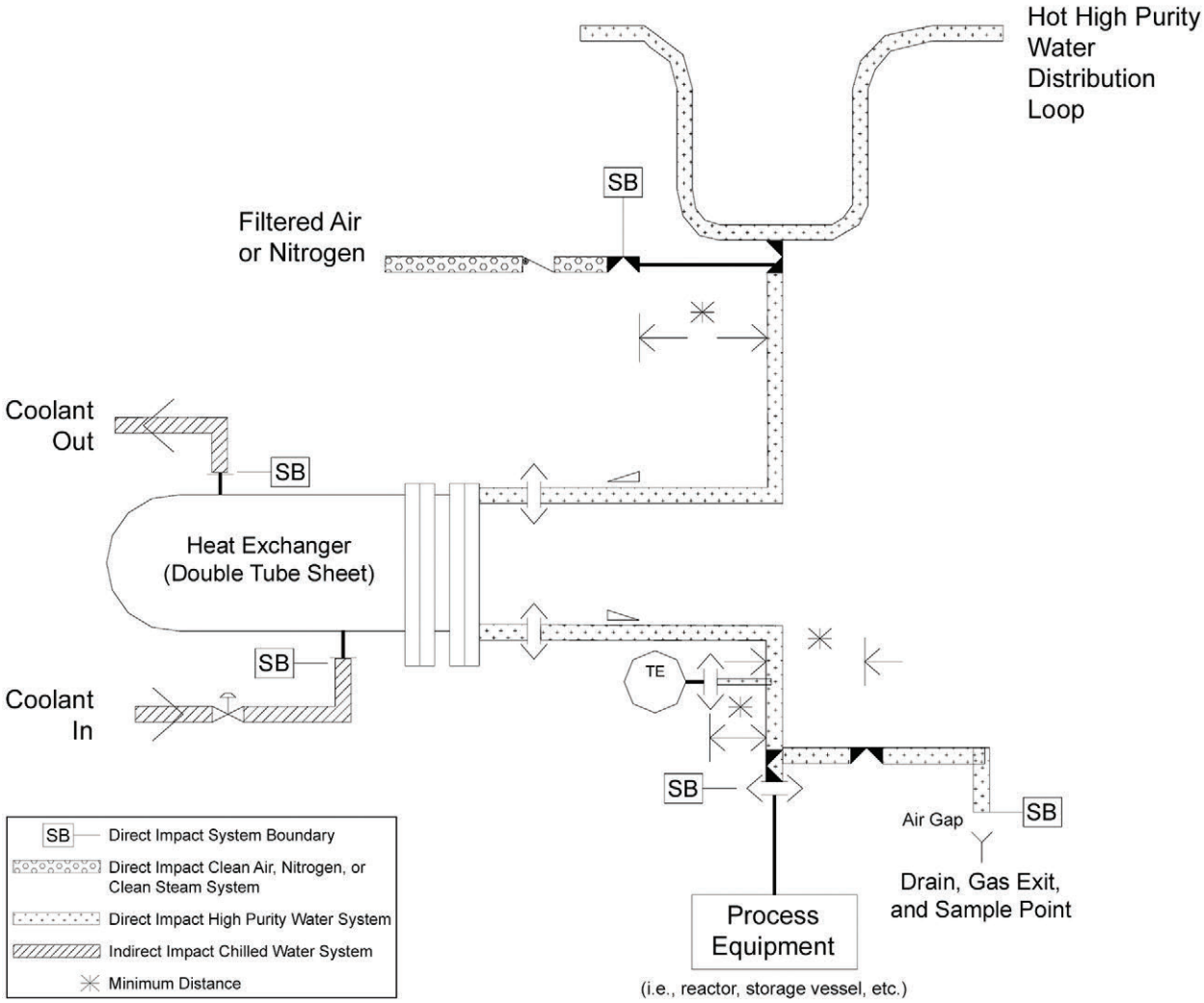

This Document is licensed to

Miss Olga Chung
Taiwan,
ID number: 1002915

Downloaded on: 6/7/22 3:22 AM

For individual use only. © Copyright ISPE 2016. All rights reserved.

Figure 6.4: POU Piping with Hose System Classification Example

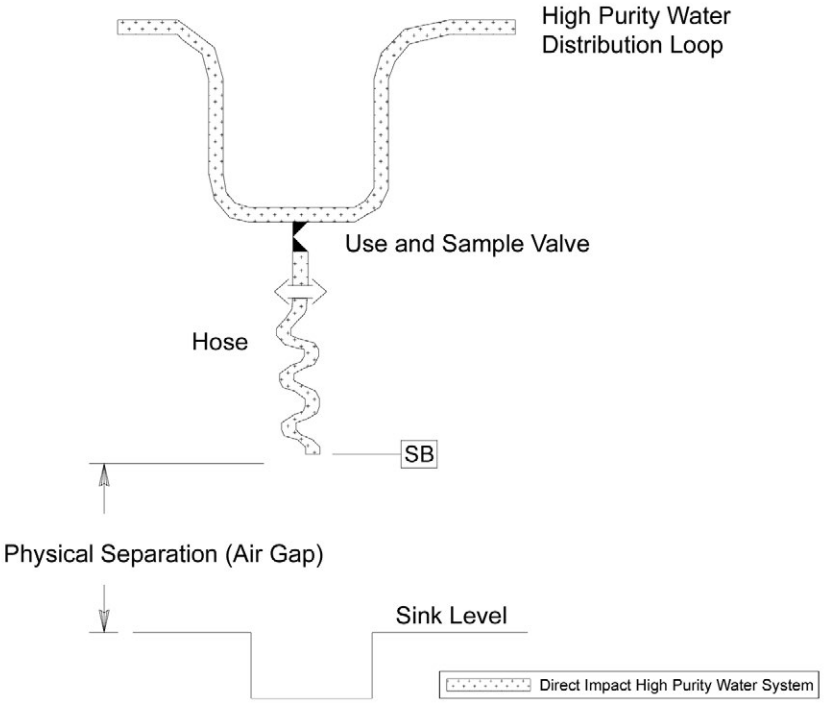

Figure 6.5: Water Distribution System Sub-Loop Example

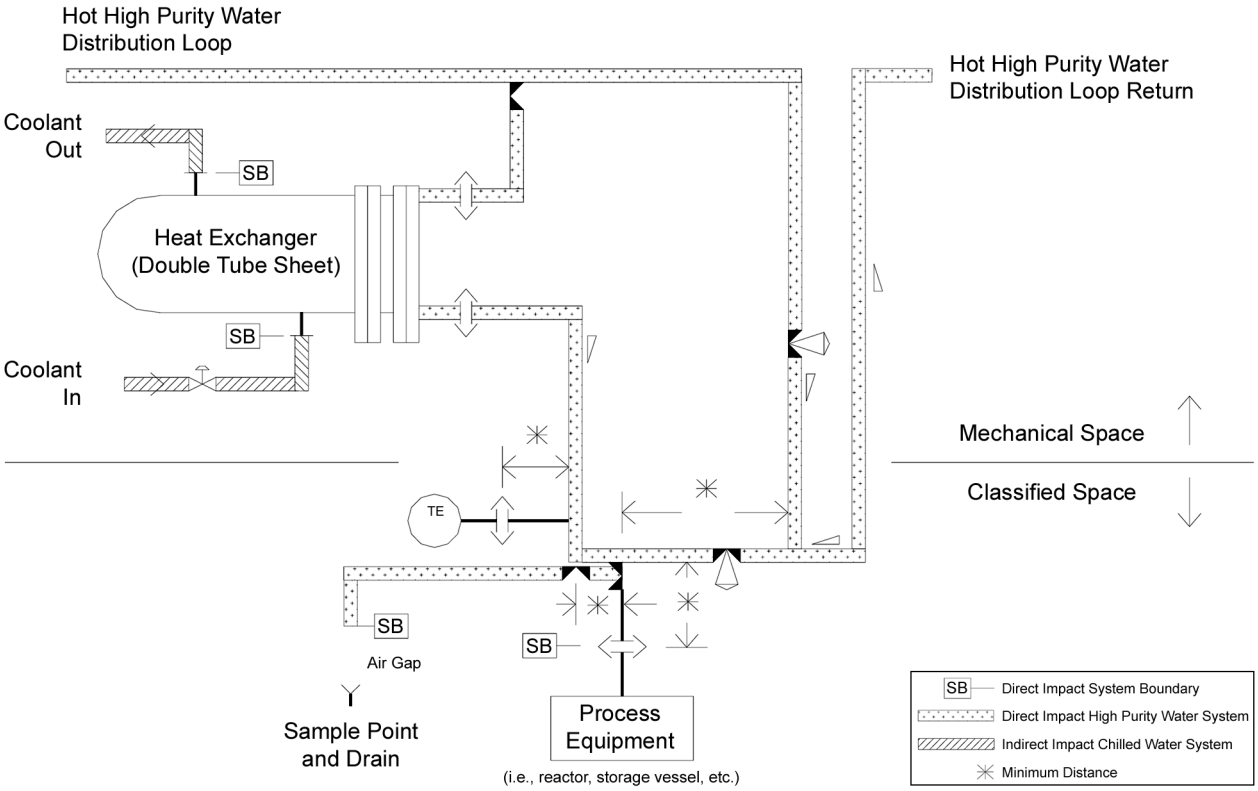

For individual use only. © Copyright ISPE 2016. All rights reserved.

7 Appendix 3 – Factors Influencing Pure Steam Generator Performance

The purification system generating the water feeding a PSG typically needs the same monitoring and maintenance attention as pretreatment systems feeding distillation units that generate WFI grade water. This monitoring can help to optimize control of the pretreatment unit operations and steam generation processes. Monitoring could also serve to alert the user to take remedial action to avoid Action Limits and specification failures in the steam.

The process of generating steam from water is reasonably efficient at separating pure water vapor from the chemical contaminants that stay behind in the evaporator. However, the separation is not absolute due to potential entrainment of mist from the incoming water (and its chemical contaminants) and carryover of contaminants into the pure steam.

It is commonly accepted that the phase change and mist elimination processes of distillation will purify feed water by at least three orders of magnitude (≥ 1000-fold or ≥ 99.9% impurity reduction), allowing no more than 0.1% of the feed water impurities to remain in the distillate or steam (see the *ISPE Baseline® Guide: Water and Steam Systems (Second Edition)* [7]).

However, there may be distinctions between the generation of WFI by distillation units and the generation of PS by steam generators. These distinctions relate to the nature of their source waters, the unit operations designed to prepare that water for the generation of steam, and the associated mist elimination and blow down designs, all of which could impact the quality and performance of the PSG and pretreatment system.

7.1 Source Water

7.1.1 Pharmaceutical Grade Feed Water from WFI Systems

Organizations may choose to feed their PSGs with WFI, usually from a POU valve that is part of the WFI loop, although this is not a regulatory requirement.

When the feed water to a PSG already has very low or undetectable levels of endotoxin, and is otherwise chemically pure, no additional PSG feed water pretreatment system monitoring is required. When properly operated, the chemical attributes of the PSG's feed water are very similar to as those of the steam it generates.

The WFI system pretreatment process should be monitored and controlled in order for the distillation process to produce WFI. Information on sampling for water is contained in Chapter 2 of this Guide.

This Document is licensed to

7.1.2 Pharmaceutical Grade Feed from PW Systems

The source water which is fed to a PSG should already be chemically pure and sufficiently free from chemical contaminants, e.g., hardness and silica that could damage the steam generator equipment, as well as from high levels of inorganic impurities and TOC. Organizations may choose to feed their PSGs with water from a PW distribution loop that may also feed other manufacturing uses, although this is not a regulatory requirement.

Nitin Shah
Thursday,
ID number: 1002915

Because PW has no endotoxin requirement, without specific microbial and endotoxin control precautions, excessive levels of endotoxin may be present in the feed water.

Downloaded on: 6/7/22 3:22 AM

For individual use only. © Copyright ISPE 2016. All rights reserved.

Since PSGs have a finite impurity removal capability (including endotoxin), the endotoxin levels in the PW feeding the PSG may be monitored to ensure that the removal capability of the steam generator is not exceeded. With an assumed 3-log endotoxin removal capability and proper equipment operation, the endotoxin level in the feed water would have to be in excess of 100 endotoxin units/ml to create conditions that would challenge the removal capabilities of a PSG. Endotoxin levels this high are typically not seen in a PW system where microbial control measures are in effect. For this reason, monitoring the endotoxin level in the PW distribution system may not be necessary. Depending on the PSG design and the presence of mist elimination, the actual log reduction capabilities of a PSG may be higher or lower and may impact the decision on endotoxin monitoring in the PW system.

7.1.3 Potable Water

Like PW and WFI, the USP monograph for PS indicates that it should be prepared from a starting material that meets the drinking/potable water requirements established by the US, EU, Japan, or the WHO. The user may feed a PSG from a PW or WFI distribution system outlet or may use a dedicated potable water pretreatment system to provide feed water to the PSG. While there is no compendial requirement that the water feeding a PSG meets PW or WFI quality requirements, the water quality should meet the quality attributes stipulated by the PSG manufacturer to ensure successful operation and maintenance. Water quality attributes such as conductivity, TOC, endotoxin, ammonia, and other attributes should be monitored to ensure that they do not exceed the purification capabilities of the PSG. The source of the potable water supply could have a dramatic impact on its starting purity, and therefore, on the required pretreatment.

Based on the initial cost and the cost of maintenance/operation, it may be more economical to include additional capacity in the feed water system for PW and WFI systems to support the capacity of the PSG system rather than to use a dedicated and separate pretreatment system for the PSG.

7.2 Steam Generator Mist Elimination Capability

The USP monograph for pure steam specifically states that the pure steam generation process uses a process that “prevents source water entrainment.” [9] PSGs without mist elimination will have poorer log reductions of feed water contaminants and this should be considered when devising a sampling plan.

Well designed and well operated systems using WFI as feed water have no need for mist elimination, as the feed water is already of suitable quality for steam. These uses may have lower risk for PS quality attributes of conductivity, TOC or endotoxin content because of the absence of mist elimination. There may be no need to monitor the feed water for these quality attributes, even with a steam generator without any mist elimination capability, as long as the WFI feed water complies with USP monograph requirements and is not compromised by other aspects of the steam generation equipment.

This Document is licensed to

When using PW as feed water to a PSG, endotoxin levels may be higher and mist elimination becomes a more important consideration. Ongoing sampling and monitoring ensures that the endotoxin levels continue to be low enough to be effectively removed by the PSG.

Miss Olga Chung
Kuwait,
IP address: 168.187.5.5
Downloaded on: 6/7/22 3:22 AM

A standalone PSG feed water pretreatment system that is either not well designed or not properly maintained carries a high risk of contaminant carry over into the pure steam. These systems could also experience endotoxin and TOC generated in situ by the pretreatment system. Regardless of the presence of mist elimination capabilities, these systems are likely to require the most rigorous monitoring of quality attributes.

For individual use only. © Copyright ISPE 2016. All rights reserved.

7.3 Non-condensable Gas Removal Capability

Without a dissolved gas removal process prior to or as part of the PSG, these gases will pass through a PSG and directly into the distributed steam. In low usage systems, non-condensable gases can accumulate in the distribution piping system if there is no means for their removal. The presence of non-condensable gases in PS will reduce the efficacy of steam sterilization process, with BS EN 285:2015 [19] and HTM 2010 [28] standards stipulating non-condensable gas requirements for steam used in sterilizers.

There is no simple direct test for these dissolved gases in the feed water to a PSG. However, dissolved gases are more soluble in cold water and less soluble in hot water. Whenever the feed water to the PSG is hot WFI, the hot water will contain very little dissolved gas. Steam systems whose feed water is hot WFI have few problems with non-condensable gases in the distributed steam.

However, if the feed water to the PSG is at ambient temperature, higher levels of dissolved gases will be present. Ambient temperature feed water has the potential for containing dissolved gases such as CO_2, O_2, and N_2. If this ambient feed water is highly deionized, it will be extremely low in conductivity and there will be no CO_2 present. Both nitrogen and oxygen may be present, with more oxygen presence if the feed water pretreatment system utilizes an ozone generating process for microbial or TOC control.

The removal of dissolved gases from PSG feed water is typically accomplished using as vacuum degassification or high efficiency deionizers (CO_2 removal only).

7.4 Blow Down Adjustment

Monitoring of the blow down discharge coupled with periodic testing of conductivity, TOC, and endotoxin in the feed water may be appropriate to establish a blow down rate aligned with the manufacturer's recommendations and guidelines.

7.5 Potable Water Chloramine Use

Chloramine use in potable water disinfection is gaining popularity over chlorine because of chlorine's in situ generation of carcinogenic disinfection byproducts such as THMs and HAAs. Chloramines are produced by adding ammonia to water containing free chlorine. When chloramines are removed by a pretreatment system, some residual ammonia may remain. Ammonia will pass through most pretreatment processes and will also pass through a PSG and contaminate the PS, causing it to fail its conductivity specifications.

Processes designed initially to remove chlorine are usually not as effective at removing chloramine. Ammonia exists in different forms based on the pH of the water and ammonia removal is assured with the proper equipment. When chloramine is in use, both ammonia and chlorine should be monitored after a dechlorination step. Changes from chlorine to chloramine disinfection by a water municipality without notification may cause equipment damage and the production of non-compliant WFI or PS, potentially impacting finished product quality and impacting patient safety.

This Document is licensed to
Chiu Hsien Chen
Taiwan,
ID number: 1002915
(2019-03-07 00:00:00 GMT+08:00)

7.6 Anti-scaling Steam Additives

The use of steam additives to minimize corrosion in a PSG and distribution piping system is strictly forbidden. Many plant steam additives are intended to carry over into the steam. If used in the feed water for a PSG, these additives would cause the PS to fail its quality attributes. This is typically not a problem since plant steam and clean steam condensate collection and return systems are kept separate and plant steam condensate is never returned to the feed of a PSG.

For individual use only. © Copyright ISPE 2016. All rights reserved.

7.7 Monitoring Locations and Frequency

There are no pretreatment system monitoring requirements stipulated by regulatory authorities. Pretreatment operation and monitoring should follow the guidelines established in this and other ISPE guidance documents for compendial water and steam systems (see the *ISPE Baseline® Guide: Water and Steam Systems (Second Edition)* [7] as well as the *ISPE Good Practice Guide: Approaches to Commissioning and Qualification of Pharmaceutical Water and Steam Systems (Second Edition)* [13]).

Quality attributes may need to be periodically monitored in the:

- Incoming source water
- Between pretreatment unit operations
- Feed water to the steam generator

The frequency should be appropriate for each system.

This Document is licensed to

Miss Olga Chung
Taiwan,
ID number: 1002915

Downloaded on: 6/7/22 3:22 AM

For individual use only. © Copyright ISPE 2016. All rights reserved.

8 Appendix 4 – References

1. FDA "Guide to Inspections of High Purity Water Systems," July 1993, The Division of Field Investigations, Office of Regional Operations, Office of Regulatory Affairs, US Food and Drug Administration (FDA), www.fda.gov.

2. European Pharmacopoeia (EP), EDQM Council of Europe, https://www.edqm.eu/en/ph-eur-9th-edition.

3. International Organization for Standardization (ISO), www.ISO.org.

4. American Society for Testing and Materials (ASTM) International, West Conshohocken, PA, www.astm.org.

5. Association for the Advancement of Medical Instrumentation (AAMI), www.aami.org.

6. Clinical and Laboratory Standards Institute (CLSI), http://clsi.org.

7. *ISPE Baseline® Pharmaceutical Engineering Guide, Volume 4 – Water and Steam Systems,* International Society for Pharmaceutical Engineering (ISPE), Second Edition, December 2011, www.ispe.org.

8. USP <643> Total Organic Carbon, United States Pharmacopeial Convention, www.usp.org.

9. USP <1231> Water for Pharmaceutical Purposes, United States Pharmacopeial Convention – National Formulary (USP-NF), www.usp.org/usp-nf.

10. EudraLex Volume 4 – Guidelines for Good Manufacturing Practices for Medicinal Products for Human and Veterinary Use, Annex 1: Manufacture of Sterile Medicinal Products, http://ec.europa.eu/health/documents/eudralex/vol-4/index_en.htm.

11. JP16 General Information, G8 Water, Quality Control of Water for Pharmaceutical Use, Section 4.2 Sampling, Japanese Pharmacopoeia (JP) – Sixteenth Edition, Pharmaceuticals and Medical Devices Agency (PMDA), http://www.pmda.go.jp/english/rs-sb-std/standards-development/jp/0005.html.

12. International Council for Harmonisation (ICH), ICH Harmonised Tripartite Guideline, *Good Manufacturing Practice Guide for Active Pharmaceutical Ingredients – Q7/Q7A,* Step 4, 10 November 2000, www.ich.org.

13. *ISPE Good Practice Guide: Approaches to Commissioning and Qualification of Pharmaceutical Water and Steam Systems,* International Society for Pharmaceutical Engineering (ISPE), Second Edition, July 2014, www.ispe.org.

14. WHO Technical Report Series, No. 929, Annex 3: WHO Good Manufacturing Practices: Water for Pharmaceutical Use, World Health Organization (WHO), 2005, http://www.who.int/medicines/publications/pharmprep/en/.

15. Chinese Pharmacopeia (ChP), www.usp.org.

16. *ISPE Good Practice Guide: Ozone Sanitization of Pharmaceutical Water Systems,* International Society for Pharmaceutical Engineering (ISPE), First Edition, July 2012, www.ispe.org.

17. United Sates Pharmacopeia (USP), 23rd Edition, 5th Supplement, United States Pharmacopeial Convention, www.usp.org.

18. USP <645> Water Conductivity, United States Pharmacopeial Convention, www.usp.org.

19. BS EN 285:2015 – Sterilization; Steam Sterilizers; Large Sterilizers, http://shop.bsigroup.com.

This Document is licensed to
Miss Olga Chung
Taiwan
ID number: 1002915
Downloaded on: 6/7/22 3:22 AM

For individual use only. © Copyright ISPE 2016. All rights reserved.

20. ANSI/AAMI ST79:2010/A4:2013, Comprehensive guide to steam sterilization and sterility assurance in health care facilities, Association for the Advancement of Medical Instrumentation (AAMI), www.aami.org.

21. ASME BPE-2014: Bioprocessing Equipment, American Society of Mechanical Engineers (ASME), www.asme.org.

22. Health Technical Memorandum (HTM) 2031: Clean Steam for Sterilization, http://www.wales.nhs.uk/sites3/Documents/254/HTM%202031%201997.pdf.

23. ISO 13408-5:2006 Aseptic Processing of Health Care Products -- Part 5: Sterilization in Place, International Organization for Standardization (ISO), www.iso.org.

24. Technical Report No. 1, Validation of Moist Heat Sterilization Processes Cycle Design, Development, Qualification and Ongoing Control, Revised 2007, Parenteral Drug Association (PDA), www.pda.org.

25. ISO 17665-1:2006 Sterilization of Health Care Products -- Moist Heat -- Part 1: Requirements for the development, validation and routine control of a sterilization process for medical devices, International Organization for Standardization (ISO), www.iso.org.

26. ISO 11140-4:2007 Sterilization of Health Care Products -- Chemical Indicators -- Part 4: Class 2 indicators as an alternative to the Bowie and Dick type test for detection of steam penetration, International Organization for Standardization (ISO), www.iso.org.

27. United States Pharmacopeial Convention (USP), www.usp.org.

28. Health Technical Memorandum (HTM) 2010: Sterilization, Part 3: Validation and Verification, http://www.wales.nhs.uk/sites3/Documents/254/HTM%202010%20Pt3%20Val%201994.pdf.

29. *ISPE Good Practice Guide: Process Gases,* International Society for Pharmaceutical Engineering (ISPE), First Edition, July 2011, www.ispe.org.

30. FDA Guidance for Industry: Sterile Drug Products Produced by Aseptic Processing – Current Good Manufacturing Practice, September 2004, US Food and Drug Administration (FDA), www.fda.gov.

31. ISO 8573 – Compressed Air series, International Organization for Standardization (ISO), www.iso.org.

32. ISO 8573-4:2001 Compressed Air -- Part 4: Test methods for solid particle content, International Organization for Standardization (ISO), www.iso.org.

33. ISO 8573-3:1999 Compressed Air -- Part 3: Test methods for measurement of humidity, International Organization for Standardization (ISO), www.iso.org.

34. ISO 8573-1:2010 Compressed Air -- Part 1: Contaminants and purity classes, International Organization for Standardization (ISO), www.iso.org.

35. National Primary Drinking Water Regulations (NPDWR) (as cited in 40 CFR Part 141), United States Environmental Protection Agency (EPA), www.epa.gov.

This Document is licensed to
Miss Olga Chung
Taiwan,
ID number: 1002015
Downloaded on: 6/7/22 3:22 AM

For individual use only. © Copyright ISPE 2016. All rights reserved.

9 Appendix 5 – Glossary

9.1 Acronyms and Abbreviations

AAMI	Association for the Advancement of Medical Instrumentation
ANSI	American National Standards Institute
API	Active Pharmaceutical Ingredient
ASME	American Society of Mechanical Engineers (US)
ASTM	American Society for Testing and Materials (US)
BPE	Bioprocessing Equipment (ASME National Standard)
CAPA	Corrective Action and Preventive Action
CFU	Colony Forming Unit
CEDI	Continuous Electro De-Ionization
CLSI	Clinical and Laboratory Standards Institute (US)
CoA	Certificate of Analysis
CPP	Critical Process Parameter
CQA	Critical Quality Attribute
CUP	Critical Use Point
EN	European Norm
EP	European Pharmacopeia
EPA	Environmental Protection Agency (US)
FDA	Food and Drug Administration (US)
GEP	Good Engineering Practice
HAA	Haloacetic Acid
HACCP	Hazard Analysis and Critical Control Point
HDPE	High Density Polyethylene
HPW	Highly Purified Water
HTM	Health Technical Memorandum
HVAC	Heating, Ventilation, and Air Conditioning

This Document is licensed to
Miss Olga Chung
Taiwan,
ID number: 1002915
Downloaded on: 6/7/22 3:22 AM

For individual use only. © Copyright ISPE 2016. All rights reserved.

IPA	Isopropyl Alcohol
JP	Japanese Pharmacopeia
IQ	Installation Qualification
ISO	International Organization for Standardization
LAL	Limulus Amoebocyte Lysate
NCG	Non-condensable Gas
NPDWR	National Primary Drinking Water Regulations (US FDA)
OOS	Out Of Specification
OQ	Operational Qualification
PAT	Process Analytical Technology
POU	Point Of Use
PQ	Performance Qualification
PSE	Periodic System Evaluation
PSG	Pure Steam Generator
PTFE	Polytetrafluoroethylene (Teflon®)
PVC	Polyvinyl Chloride
PW	Purified Water
QA	Quality Assurance
QC	Quality Control
RA	Risk Analysis
RO	Reverse Osmosis
RMM	Rapid Microbial Method
RTR	Real Time Release
SDI	Silt Density Index
SIP	Sterilize-In-Place
SME	Subject Matter Expert
SOP	Standard Operating Procedure

This Document is licensed to
Miss Olga Chung
Taiwan,
ID number: 1002915
Downloaded on: 6/7/22 3:22 AM

For individual use only. © Copyright ISPE 2016. All rights reserved.

SPC	Statistical Process Control
THMs	Trihalomethanes
TOC	Total Organic Carbon
USP	United States Pharmacopeia
UV	Ultraviolet
WFI	Water for Injection
WHO	World Health Organization

9.2 Definitions

Action Level

Levels or ranges (actual attribute values) that, when exceeded, indicate that a process has drifted from its normal operating range. Exceeding an Action Level indicates that corrective action should be taken to bring the process back into its normal operating range.

Action Limit

Criteria established based on possible impact to product quality, outside the operating range (acceptance criteria). A documented response is usually required. *(also see: Action Point)*

Action Point

Used in determining when a parameter has drifted outside the operating range.

Adsorption

Nonspecific adherence of molecules in solution or suspension to cells, particles, or other molecules. *(also see: Desorption)*

Alert Level

This Document is licensed to

Levels or ranges (actual attribute values) that, when exceeded, indicate that a process may have drifted from its normal operating condition. Alert Levels constitute a warning and do not necessarily require a corrective action.

Miss Olga Chung
Taiwan,
IP Address: 103.2.2.915

Alert Limit

Criteria established with the intent of notification and possible corrective action prior to exceeding action limits; alert when a parameter is drifting toward extremes of the operating range.

Alert Point

Downloaded on: 6/7/22 3:22 AM

Used in determining when a parameter is drifting toward extremes of the operating range.

Aseptic

Not sterile, but contaminants controlled within established acceptable limits.

For individual use only. © Copyright ISPE 2016. All rights reserved.

At-Line

In water monitoring systems. *(also see: Off-Line)*

Atmospheric Dew Point

This term refers to what the dewpoint would be if fully depressurized to atmospheric conditions (1013 mbar at either 15 or 20°C (59 or 68°F). *(also see: Pressure Dew Point)*

Bacteria

Single-celled microorganisms measured in high purity water by several means: culturing, high power microscope, or Scanning Electron Microscope (SEM). The value is reported as Colony Forming Units (CFU), or colonies per milliliter or per liter. The bacteria in the water act as particle contamination on the surface of the product, or as a source of detrimental by-products. *(also see: Pyrogen)*

Bioburden

The concentration of microbial matter per unit volume. Microbial matter includes viruses, bacteria, yeast, mold, and parts thereof.

Biofilm

A collection of microorganisms, extracellular polymeric products, and organic matter located at the interface in solid-liquid, gas-liquid, or liquid-liquid biphasic systems.

Biologic

A therapeutic agent derived from living organisms.

Blowdown

The withdrawal of water from an evaporating water system to maintain a solids balance within specified limits of concentration of those solids.

Chemical Free Steam

Non-direct impact steam produced from pretreated water with no volatile boiler additives. May be used for humidification but is not used for product contact.

This Document is licensed to

Chloramine

A chlorine compound formed by reaction with organic amines or ammonia.

Miss Olga Chung
Taiwan,
ID number: 1002915

Commissioning

A well planned, documented, and managed engineering approach to the start-up and turnover of facilities, systems, and equipment to the end-user that results in a safe and functional environment that meets established design requirements and stakeholder expectations.

Downloaded on: 6/7/22 3:22 AM

Compendial

Official; purported to comply with USP, EP, or JP.

For individual use only. © Copyright ISPE 2016. All rights reserved.

Conductivity

A measure of flow of electrical current through water. This conductance is high with high Total Dissolved Solids (TDS) water and very low with ultrapure deionized water. Conductivity is the reciprocal of resistivity (C=1/R) and is measured in micromho/cm (μmho/cm) or microsiemens/cm (μS/cm). *(also see: Resistivity)*

Contaminant

Any foreign component present in another substance. For example, anything in water that is not H2O is a contaminant.

Critical Quality Attribute

Attribute of the water or steam product which usually relates to the identity, purity, or quality of the water or steam product. Some attributes for water and steam are, contained levels of TOC, conductivity, microbial activity, etc.

Critical Utility

Utility that has the identified potential to impact product quality or performance in a significant way.

Critical Utility Sampling

In the case of WFI, it is the expectation that water samples will be taken from each point of use (POU) and sample point in the distribution system, at least once per week, although the widespread implementation of risk analysis tools may cause this expectation to be challenged in the future.

Dead Leg

An area of entrapment in a vessel or piping run that could lead to contamination of the product.

Desorption

The opposite of adsorption; the release of adsorbed molecules, particles, or cells into the surrounding medium. (also see: Adsorption)

Dew Point

The dew point is the temperature to which a given parcel of humid air must be cooled, at constant barometric pressure, for water vapor to condense into water. The condensed water is called dew. The dew point is a saturation temperature.

This Document is licensed to
Miss Olga Chung
Taiwan,
ID number: 1002915
Downloaded on: 6/7/22 2:22 AM

Distillation

The process of separating water from impurities by heating until it changes into vapor and then cooling the vapor to condense it into purified water.

Dry Air

Air from which all water vapor and contaminants have been removed. Its composition by volume is:

1. Nitrogen 78.08%
2. Oxygen 20.95%
3. Argon 0.93%
4. Carbon Dioxide 0.03
5. Other gases 0.00003

(also see: Moist Air)

For individual use only. © Copyright ISPE 2016. All rights reserved.

Dryness

Refers to the level of steam saturation, and it is the ratio of vapor mass to the mass of the steam mixture. Dryness has a value of 1.0 which is representative of dry saturated steam; otherwise is dimensionless.

Endotoxins

Pyrogens from certain Gram negative bacteria. Generally, highly toxic Lipopolysaccharide-protein complexes (fat, linked sugars, and protein) from cell walls. A marker for these bacteria with a reputation for persistent contamination because they tend to adhere to surfaces. (also see: Pyrogen)

Extended Sampling

In water monitoring systems – compared to Phase 3 of the *ISPE Good Practice Guide: Approaches to Commissioning and Qualification of Pharmaceutical Water and Steam Systems (Second Edition)* [13], in general terms this sampling phase allows for the system to be challenged by evaluating its effectiveness in delivering water of acceptable quality despite seasonal variations of the potable water feed to the system, the slow development of the mature system's natural flora, and any other variations that may occur. Its duration may continue for not less than one year (subtracting Initial and Intermediary phases). *(also see: Initial, Intermediary Sampling)*

Extractables

Undesirable foreign substances that are leached or dissolved by water or process streams from the materials of construction used in filters, storage vessels, distribution piping, and other product contact surfaces. *(also see: Leachables)*

Feedwater

The water entering a treatment process.

Flushing

Cleansing for the removal of particulates or water soluble contaminants, brought about by the flowing of large quantities of water over the product and/or solution contact surfaces of system components. *(also see: Rinsing)*

Gram-Negative Organism

Any prokaryotic organism that does not retain the first stain (crystal violet) used in Gram's staining technique. It does retain the second stain (safranin O) and therefore has a pink color when viewed under a light microscope. Retention of the stain is due to the structure of the cell wall.

This Document is licensed to
Miss Olga Chung
Taiwan,
Downloaded on: 6/7/22 3:22 AM

Hardness (water)

The concentration of calcium and magnesium salts in water. Hardness is a term originally referred to the soap-consuming power of water; as such it is sometimes also taken to include iron and manganese. "Permanent hardness" is the excess of hardness over alkalinity. "Temporary hardness" is equal or less than the alkalinity. These also are referred to as "non-carbonated" or "carbonate" hardness, respectively.

For individual use only. © Copyright ISPE 2016. All rights reserved.

Highly Purified Water

Water intended for use in the preparation of products where water of high biological quality is needed, except where Water for Injection is required. Highly Purified water is obtained from water that complies with the regulations on water intended for human consumption laid down by the competent authority. Current production methods include, for example, double-pass reverse osmosis coupled with other suitable techniques such as ultrafiltration and deionization. Highly Purified water meets the same quality standards as WFI but the production methods are considered less reliable than distillation and thus it is considered unacceptable for use as WFI.

Hydrocarbons

Organic compounds containing only carbon and hydrogen. Sometimes broadened to include compounds or mixtures of compounds with small amounts of oxygen also.

Hydrophilic

Having an affinity for water. Its opposite, non-water-wettable, hydrophobic.

Hydrophobic

The extent of insolubility; not readily absorbing water; resisting or repelling water, wetting, or hydration; or being adversely affected by water. Hydrophobic bonding is an attraction between the hydrophobic or non-polar portions of molecules, causing them to aggregate and exclude water from between them.

Hygienic

Of, or pertaining to, equipment and piping systems that by design, materials of construction, and operation provide for the maintenance of cleanliness so that products produced by these systems will not adversely affect human or animal health.

Hygienic Design

A system of design that meets standards, specification, codes, regulatory and industrial guidelines, and acceptable engineering design methods to reach a degree of sanitation required by food, pharmaceutical, and cosmetics processing.

Hygroscopic

The property of absorbing moisture from the air.

This Document is licensed to

Impurity

A foreign agent or material either introduced as part of processing (such as buffers or salts added during chromatography) or intrinsic to the nature of bioprocessing (such as product variants and cellular debris).

Miss Olga Chung
Taiwan,
ID number: 1002915

In-Line

An integral part of the flow path. In a fluid stream, something is said to be in-line if the entire fluid stream flows directly through or past it. *(also see: On-Line, Off-Line)*

Downloaded on: 6/7/22 3:22 AM

In-Process Control

Checks performed during production in order to monitor and, if appropriate, to adjust the process and/or to ensure that the intermediate or API conforms to its specifications. (also see: Process Control)

For individual use only. © Copyright ISPE 2016. All rights reserved.

Initial Sampling

In water monitoring systems – compared to Phase 1 of the *ISPE Good Practice Guide: Approaches to Commissioning and Qualification of Pharmaceutical Water and Steam Systems (Second Edition)* [13] and based on risk assessment, this sampling phase can be satisfied by monitoring and testing all sample and use points in the distribution system and selected other points, daily for between 10 to 20 consecutive days depending upon the design of the system. *(also see: Intermediary, Extended Sampling)*

Intermediary Sampling

In water monitoring systems – compared to Phase 2 of the *ISPE Good Practice Guide: Approaches to Commissioning and Qualification of Pharmaceutical Water and Steam Systems (Second Edition)* [13], this sampling phase further demonstrates consistent production and delivery of water of the required quality within the established ranges, when using SOP's. It also may provide additional worst case data since use points are not as frequently active. Its duration may be between 10 and 20 days. *(also see: Initial, Extended Sampling)*

Leachables

Compounds that are present in the drug formulation as a result of direct contact with the component under normal conditions. Leachables are typically a subset of extractables but may also include reaction products. *(also see: Extractables)*

Leaching

The release of plastic components or additives to the product. *(contrast with: Sorption)*

Microfiltration

A method of sterile filtration, clarification, or cell harvesting that removes particles in the 0.1 to 10.0 µm range.

Microorganism

Organisms (microbes) observable only through a microscope. Larger, visible types are called organisms.

Moist Air

A binary mixture of dry air and water vapor. Each component behaves as if the other is not present and each occupies the complete volume of the mixture. (also see: Dry Air)

This Document is licensed to

Non-condensable Gas

Air and other gas which will not condense under the conditions of steam sterilization.

Miss Olga Chung
Taiwan,
ID number: 1002915

Non-viable

Opposite of viable, not alive.

Off-Line

Downloaded on: 6/7/22 3:22 AM

In water monitoring systems – referring to measurement devices that are not directly coupled to the water stream. *(also see: In-Line, On-Line)*

For individual use only. © Copyright ISPE 2016. All rights reserved.

On-Line

In water monitoring systems – Referring to measurement devices that are directly coupled to the water stream. *(also see: In-Line, Off-Line)*

Process/Piping and Instrument Diagram (P&ID)

A diagrammatic representation (drawing) of the piping, electrical and control systems required for a specific process and/or utility system.

pH

The negative log of the hydrogen ion concentration, is a measure of the concentration of hydrogen ions (H+) in a water-based solution. The more hydrogen ions that are present, the lower the pH and the more acidic the solution.

Particulate

Usually a solid particle large enough to be removed by filtration. Non-filterable solids are usually referred to as colloids.

Particulates

Discrete quantities of solid matter dispersed in water.

Passivation

The means of obtaining the loss of chemical reactivity exhibited by certain metals under special environmental conditions. More specifically, the state in which a stainless steel exhibits a very low corrosion rate. Passivation generates an oxide film that covers and protects the surface of the metal.

Pharmaceutical

A medicinal drug, or relating to or engaged in pharmacy or the manufacture and sale of pharmaceuticals. A pharmaceutical product is generally one that is made up using available chemical compounds.

Planktonic

Term used to describe aquatic microorganisms that float.

Plant Steam

Non-direct impact steam produced by an industrial type boiler. Corrosion control additives may be present. Typically used for non-product contact heating purposes. Also called utility steam.

Point Of Use (POU)

The location where the water delivered from the water distribution system, is actually used.

This Document is licensed to
Taiwan,
ID number: 1002915
Downloaded on: 6/7/22 3:22 AM

For individual use only. © Copyright ISPE 2016. All rights reserved.

Potable Water

Water of suitable quality for drinking; It is not covered by a pharmacopeial monograph but must comply with either the NPDWR (U.S. Environmental Protection Agency's National primary Drinking Water Regulations as cited in 40 CFR Part 141 [35]), the drinking water regulations of the European union or Japan, or the WHO Drinking Water Guidelines. Unless otherwise specified, Drinking Water may be used in the early stages of cleaning pharmaceutical manufacturing equipment and product-contact components. Where compatible with the processes, the allowed contaminant levels in Drinking Water are generally considered safe for use in the manufacture of drug substances and other bulk pharmaceutical ingredients. Drinking Water is the minimum quality feed water that may be used for the production of bulk USP monographed pharmaceutical waters because its specifications establish a reasonable set of maximum allowable levels of chemical and microbiological contaminants with which a water purification system will be challenged.

Pressure Dew Point

This term refers to the dew point temperature (PDP) of a gas under full line pressure; it is usually found when measuring the dew point temperature of gases at pressure higher than atmospheric pressure. *(also see: Atmospheric Dew Point)*

Pretreatment

Initial water treatment steps performed prior to final processing to prolong the life of cartridges and filters and to protect downstream elements from premature failure. *(also see: Polishing)*

Process Control

(also see: In-Process Control)

Process Steam

Direct impact steam that, once condensed, meets the quality attributes of potable water. This steam may be used in manufacturing areas for direct injection heating and sterilization.

Pure Steam (USP)

Water that has been heated above 100°C (212°F) and vaporized in a manner that prevents source water entrainment. It is prepared from water complying with the U.S. EPA Primary Drinking Water Regulations, or with drinking water regulations of the European Union or Japan, or with WHO drinking water guidelines. It contains no added substance. The level of steam saturation or dryness, and the amount of non-condensable gases are to be determined by the Pure Steam application. Note: Pure Steam is intended for use where steam or its condensate comes in contact with the article of the preparation.

The Pharmaceutical Information
Miss Olga Chung
Taiwan,
Downloaded on: 6/7/22 3:22 AM

Purified Water

USP Purified Water prepared from water complying with the quality attributes of "Drinking Water" with conductivity in accordance with stage 1, 2 and 3 tests and Conductivity Tables. Total Organic Carbon is at 0.5 mg/l. Typically, less than 100 CFU/ml (10,000 CFU/100 ml) for microbiological acceptability.

Pyrogen

Trace organics which are used as markers of bacterial growth or contamination. Produced by various bacteria and fungi. Critical pharmaceutical and biotechnological processes have restrictions on contamination by these substances, usually at levels near the limit of detection. Primarily polysaccharide (made of linked sugars) in nature. Fever producing substances when administered parenterally to man and certain animals. *(also see: Endotoxin)*

For individual use only. © Copyright ISPE 2016. All rights reserved.

Qualification

Action of proving and documenting that equipment or ancillary systems are properly installed, work correctly, and actually lead to the expected results. Qualification is part of validation, but the individual qualification steps alone do not constitute process validation.

Quality Attribute

A molecular or product characteristic that is selected for its ability to help indicate the quality of the product. Collectively, the quality attributes define identity, purity, potency and stability of the product, and safety with respect to adventitious agents. Specifications measure a selected subset of the quality attributes.

Quality Control (QC)

Process or group responsible for coordinating the activities associated with analytical test planning and execution.

Resistivity

The measure of the resistance to the flow of electrical current through high purity water. This is measured in millions of ohms-cm or Megohm-cm (Mohm-cm). Resistivity is the reciprocal of Conductivity (R = 1/C, 1 Mohm-cm = 1 μS/cm). This provides an easy means of continuously measuring the purity of very low TDS water or ionic concentration. (also see: Absolute Purity Water). *(also see: Conductivity)*

Reverse Osmosis (RO)

A process that reverses (by the application of pressure) the flow of water in the natural process of osmosis so that it passes from the more concentrated to the more dilute solution. This is one of the processes used to reduce the ionic TDS, TOC, and suspended materials of feed water through a semipermeable membrane leaving dissolved and suspended materials behind. These are swept away in a waste stream to drain.

Rinsing

Action using a liquid, generally water, to remove and in some cases dissolve a soil. *(also see: Flushing)*

Risk Assessment

A systematic process of organizing information to support a risk decision to be made within a risk management process. It consists of the identification of hazards and the analysis and evaluation of risks associated with exposure to those hazards.

This Document is licensed to

Sampling

To take a small but representative portion of a much larger stream where the sample collected, accurately represents the content of the larger stream.

Miss Olga Chung
Taiwan,
ID Number: 1002915
Downloaded on: 6/7/2023 3:23 AM

Sampling for informational purposes only

While the biopharmaceutical industry has used this description in the past, and many in the industry continue to use it, every sample point should have a specific purpose; therefore, it is recommended that this designation be abandoned for being vague and non-specific.

For individual use only. © Copyright ISPE 2016. All rights reserved.

Sanitization

That part of decontamination that reduces viable microorganisms to a defined acceptance level; normally achieved by using a chemical agent or heat to reduce microbial levels.

Scale

The precipitate that forms on surfaces in contact with water as the result of a physical of chemical change.

Solute

A substance, usually a solid or semisolid, that forms a chemically and physically homogeneous mixture with one or more other substances, usually a liquid.

Sorption (1)

The uptake of product components by the plastic materials. *(contrast with: Leaching)*

Sorption (2)

Bonding of a solute to a plastic packaging component as a physicochemical phenomenon related to the properties of the packaging material and the chemical properties of the active substance or other soluble substances in the preparation.

Stainless Steel

Steel to which a significant amount of chromium and nickel has been added to inhibit corrosion.

Superheated Steam

Steam whose temperature, at any given pressure, is higher than the indicated by the vaporization curve of water.

Ultrafiltration

Filter technology similar to reverse osmosis that is capable of filtering colloids and large molecular weight organics out of the water. The filter capability of ultrafiltration filters to 0.005 µm particle size. Ultrafiltration also will remove organic material down to about 1,000 to 10,000 molecular weight.

Utility Systems

This Document is licensed to

Facility-wide systems not tailored to a specific process and that do not have contact with the drug substance or potential drug substance.

Miss Olga Chung
Taiwan,
IP Address: 1.162.2.15

Viable Particle

Particle that consists of, or supports, one or more live microorganisms.

Volumetric Humidity

Downloaded on: 6/7/22 3:22 AM

Thee water content of a compressed gas may be specified as mass per unit volume (mg-m^{-3}) at 1013 mbar and at either 15 or 20°C (59 or 68°F). *(also see: Moisture Content)*

For individual use only. © Copyright ISPE 2016. All rights reserved.

Water For Injection (WFI) (USP)

Prepared from water complying with the quality attributes of “Drinking Water.” Purified by distillation or a purification process that is equivalent or superior to distillation in the removal of chemicals and microorganisms. Conductivity in accordance with Stage 1, 2, and 3 tests and Conductivity Tables. Total Organic Carbon limit is at 0.5 mg/l. Typically less than 10 CFU/100ml for microbiological acceptability. Less than 0.25 USP EU/ml.

Water Treatment

Water treatment, also referred to as water conditioning, can consist of adding or removing chemicals to change the properties of water. In water softening, for example, sodium ions are substituted for metallic ions that cause “hardness” thus reducing the scale-forming tendencies of water. Water purification on the other hand, always consists of removing undesirable impurities.

Worst Case Testing

Testing which encompasses upper and lower limits, and circumstances which pose the greatest chance finding of errors. Synonymous: Most Appropriate Challenge Conditions.

This Document is licensed to

Miss Olga Chung
Taiwan,
ID number: 1002915

Downloaded on: 6/7/22 3:22 AM

For individual use only. © Copyright ISPE 2016. All rights reserved.

600 N. Westshore Blvd., Suite 900, Tampa, Florida 33609 USA
Tel: +1-813-960-2105, Fax: +1-813-264-2816

www.ISPE.org